APPENDIX A
ILLUSTRATION B

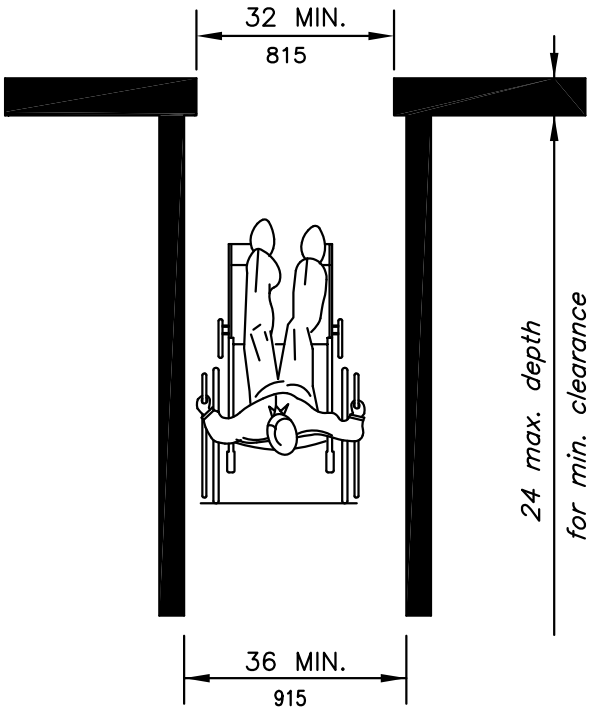

Fig. 1
Minimum Clear Width
For Single Wheelchair

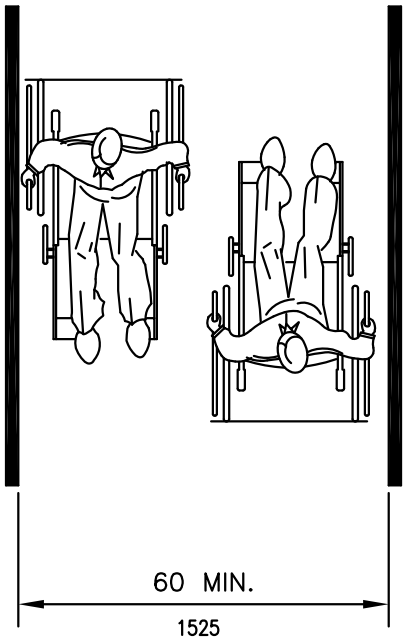

Fig. 2
Minimum Clear Width
For Two Wheelchairs

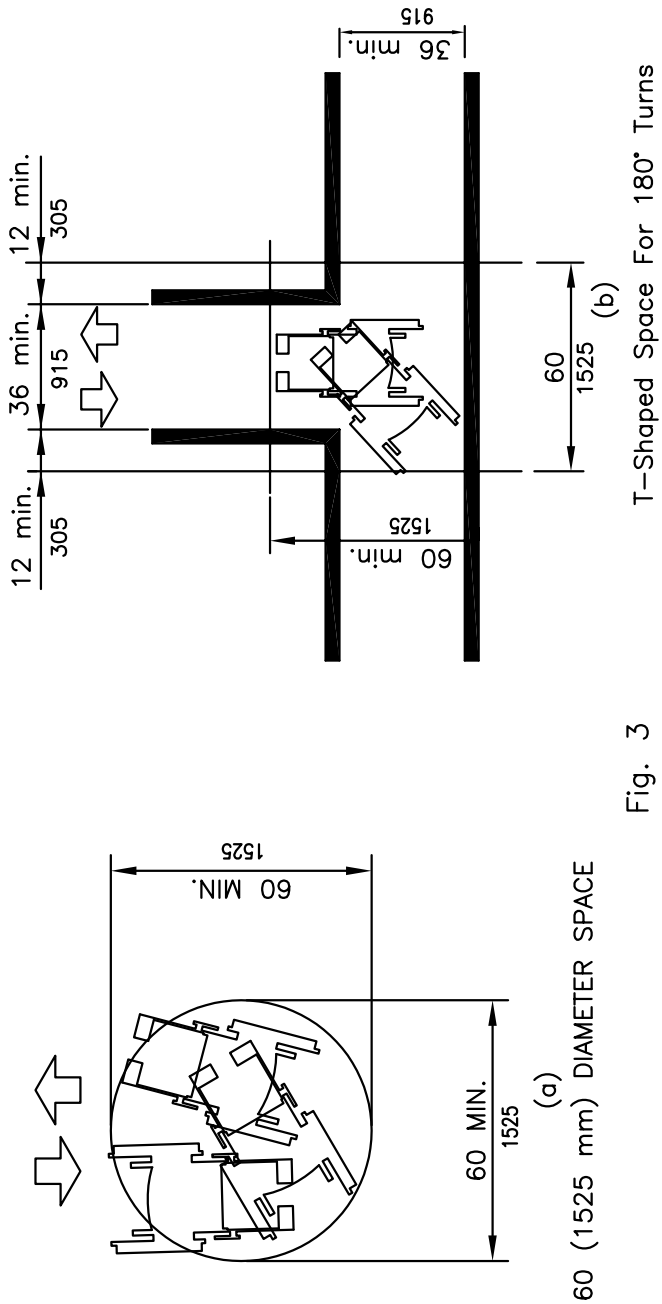

60 (1525 mm) DIAMETER SPACE

T–Shaped Space For 180° Turns

Fig. 3
Wheelchair Turning Space

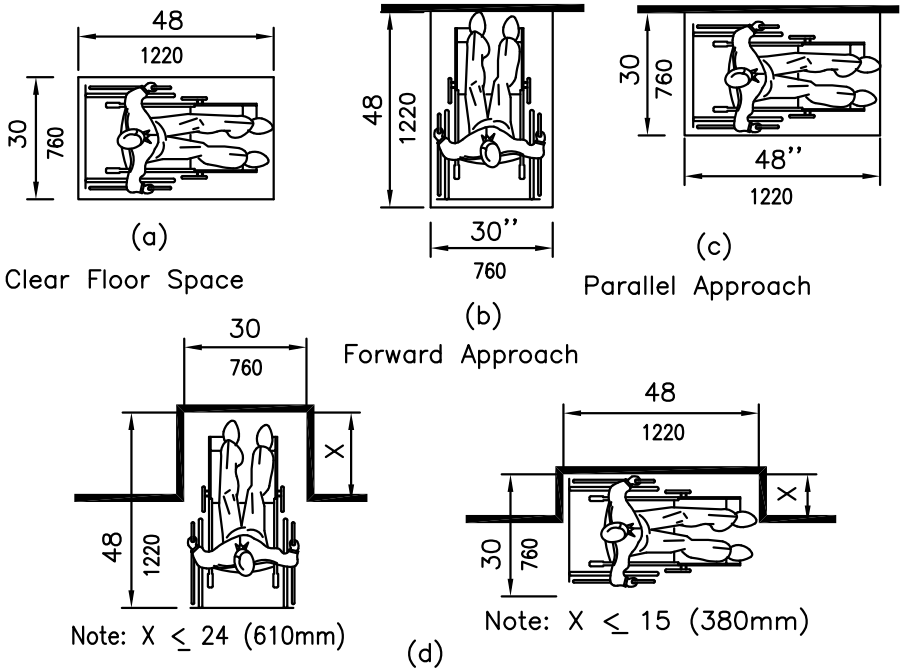

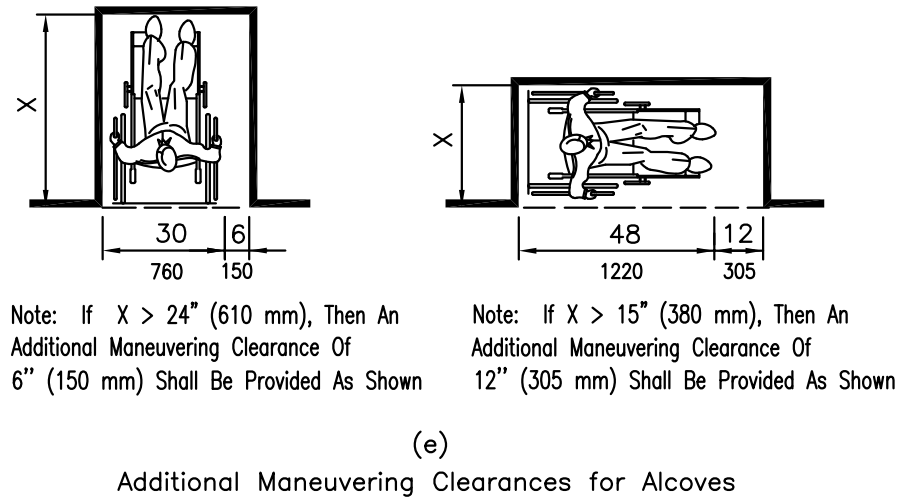

Fig. 4
Minimum Clear Floor Space For Wheelchairs

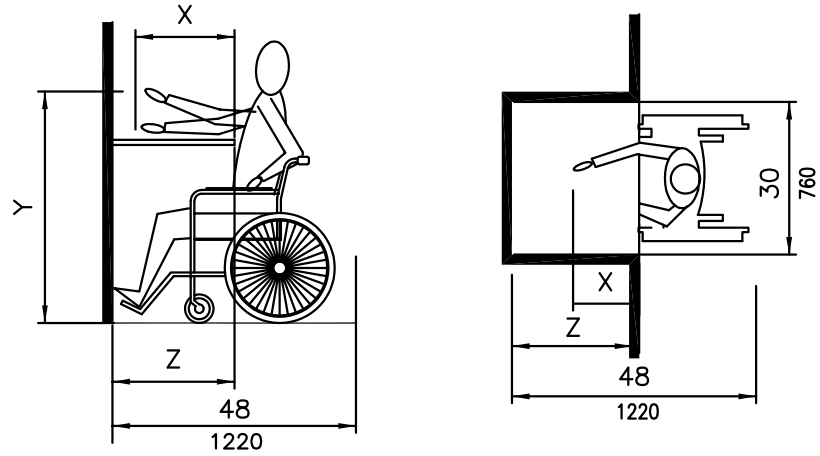

Note: x shall be ≤ 25" (635 mm); z shall be ≥ x.
When x < 20" (510mm) ,then y shall be 48" (1120 mm) maximum.
When x is 20"–25" (510 to 635 mm), then y shall be 44" (1120 mm) maximum.

(b)
Maximum Foward Reach Over An Obstruction

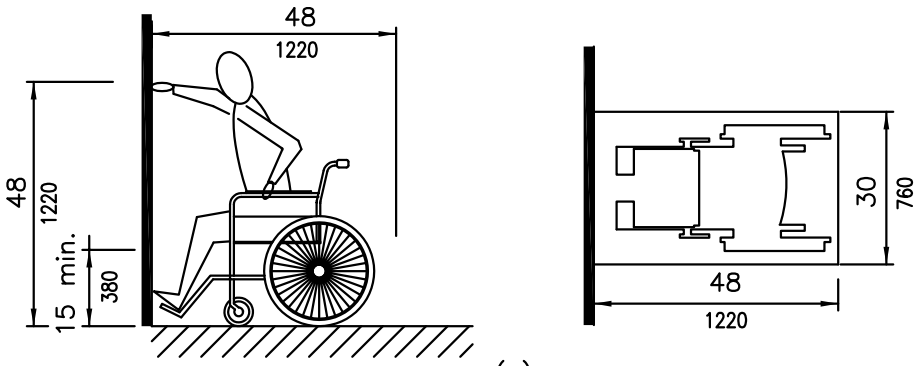

(a)
High Forward Reach Limit

Fig. 5
Forward Reach

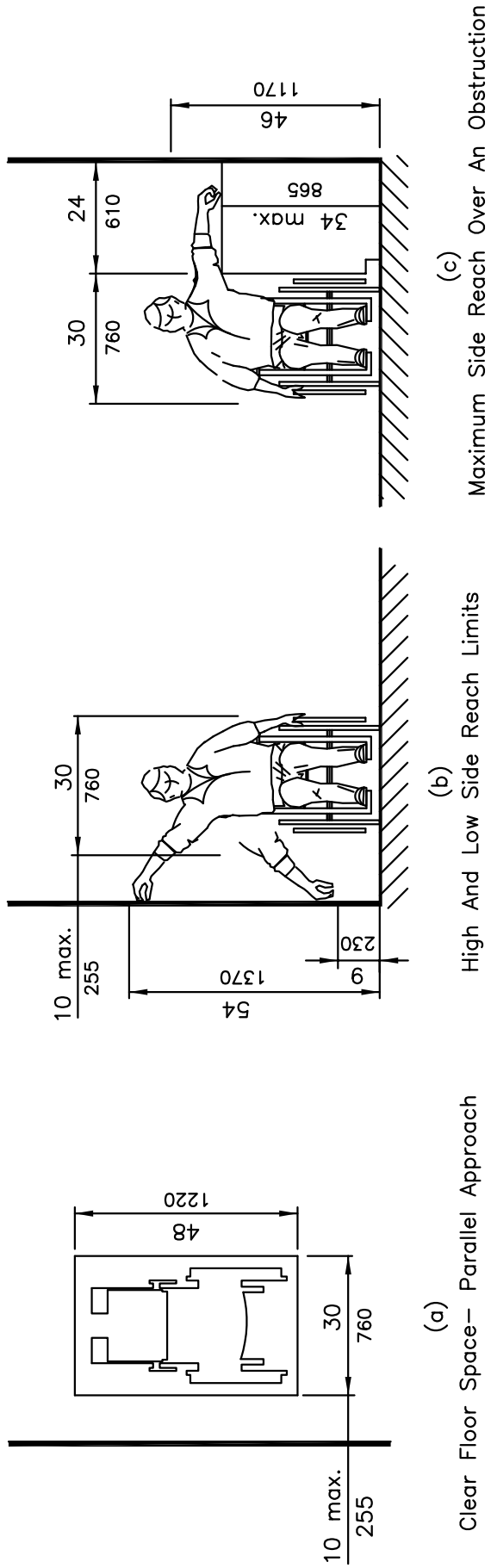

Fig. 6
Side Reach

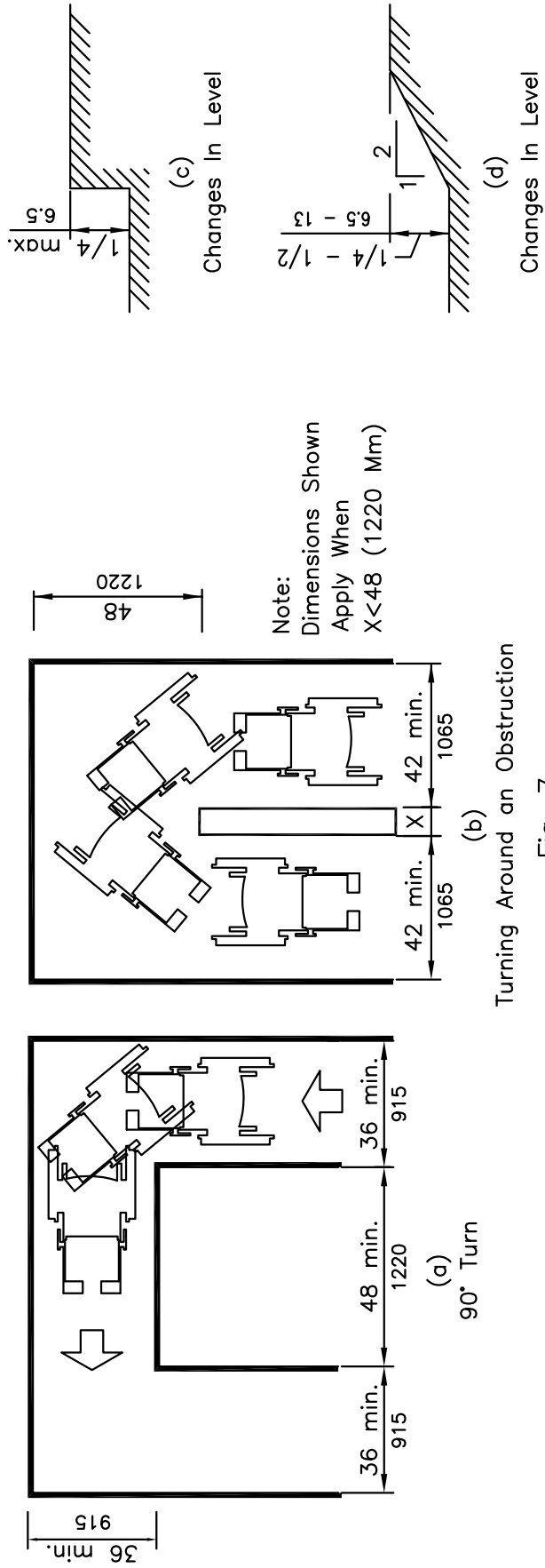

Fig. 7
Accessible Route

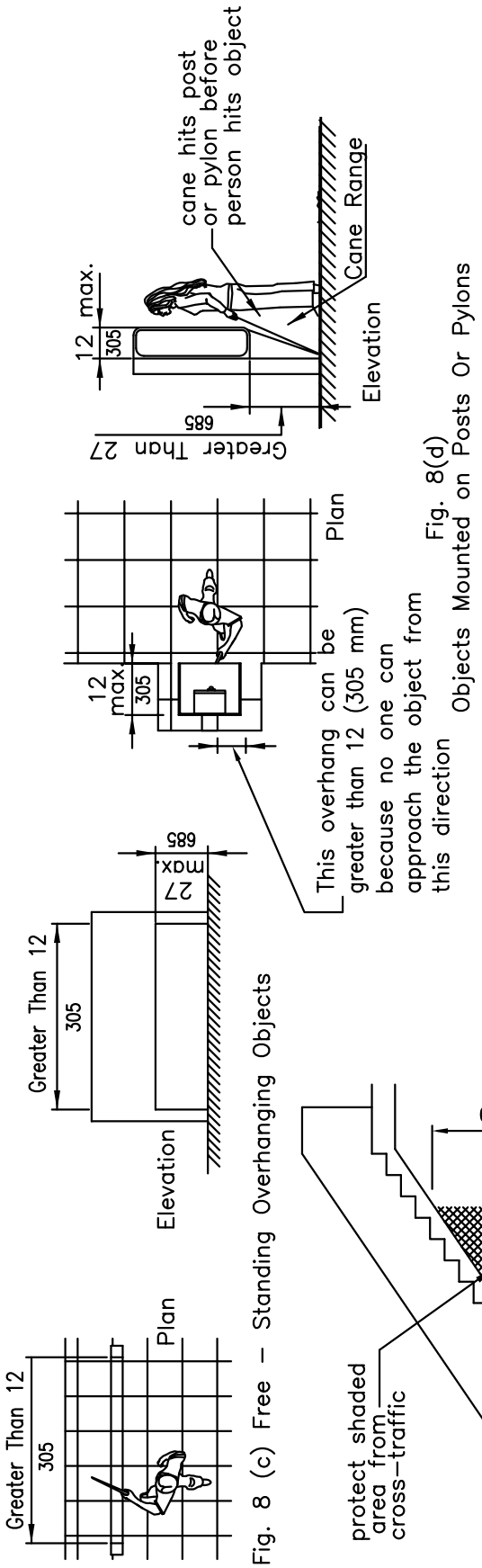

Fig. 8 (c) Free – Standing Overhanging Objects

Fig. 8(d)
Objects Mounted on Posts Or Pylons

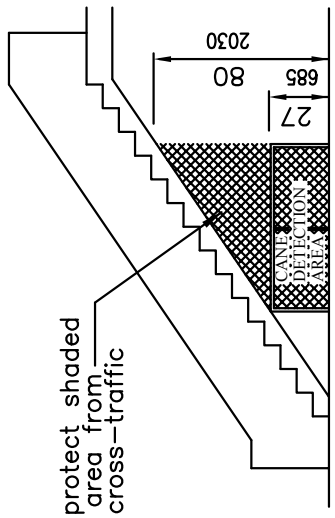

Fig. 8(c–1) Overhead Hazards

Fig. 8
Protruding Objects (continued)

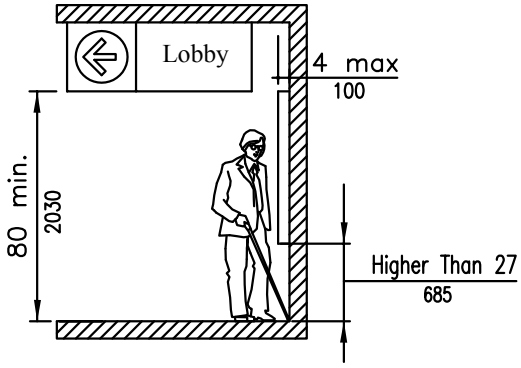

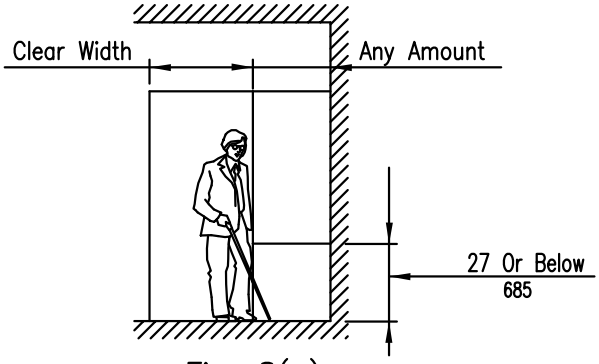

Fig. 8(a)
Walking Parallel To A Wall

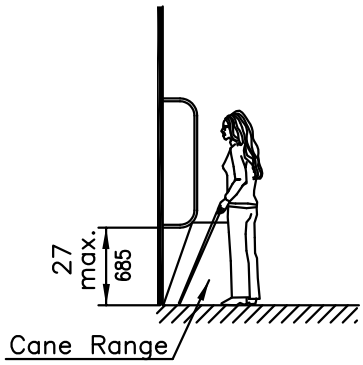

Fig. 8(b)
Walking Perpendicular To A Wall

Fig. 8
Protruding Objects

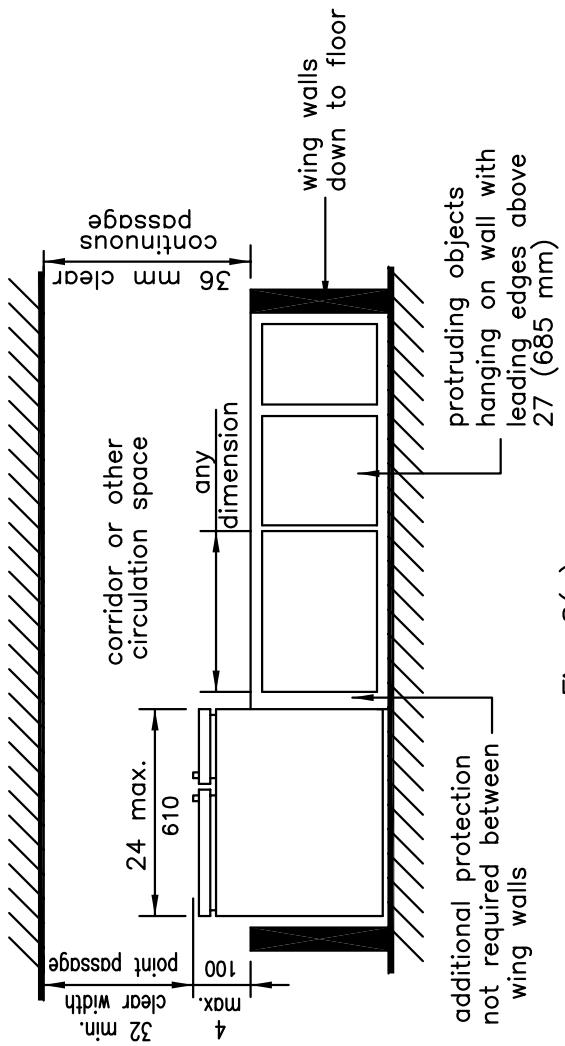

Fig. 8(e)
Example ff Protection around Wall–Mounted Objects and Measurements of Clear Widths

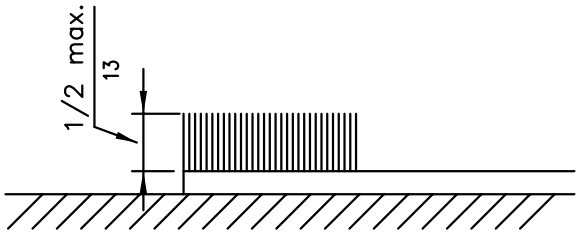

Fig. 8(f)
Carpet Pile Thickness

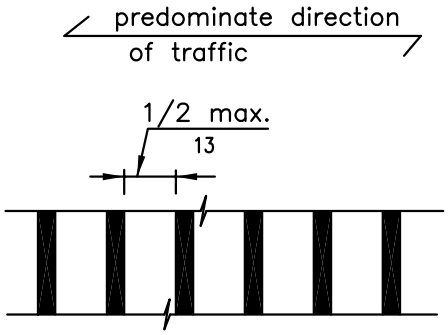

Fig. 8(g)
Gratings

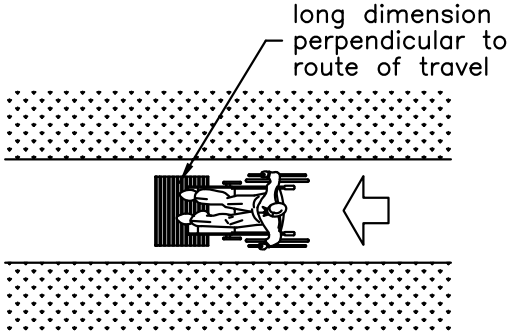

Fig. 8(h)
Grating Orientation

Fig. 8
Protruding Objects (Continued)

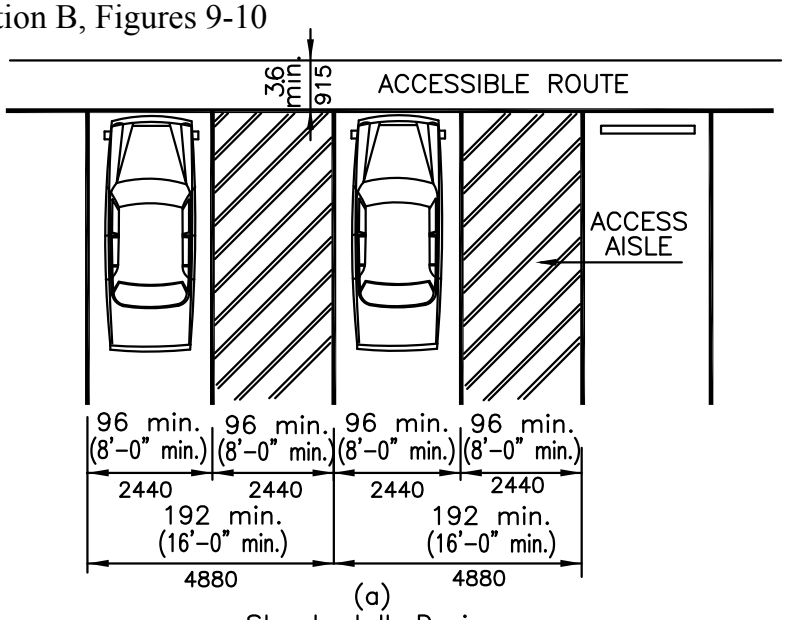

(a)
Standard IL Design

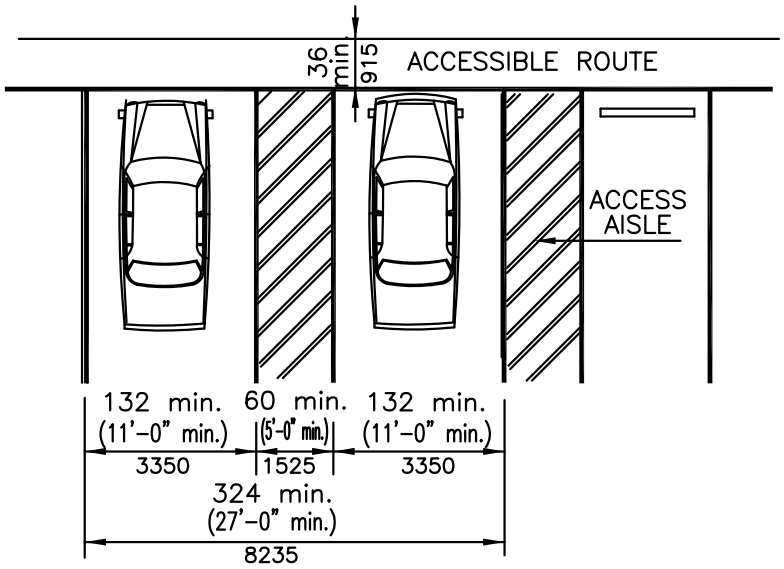

(b)
Universal Parking Space Design

Fig. 9
Dimensions Of Parking Spaces
(Typical Parking Spaces for 45°, 60°, and 90° Arrangements)

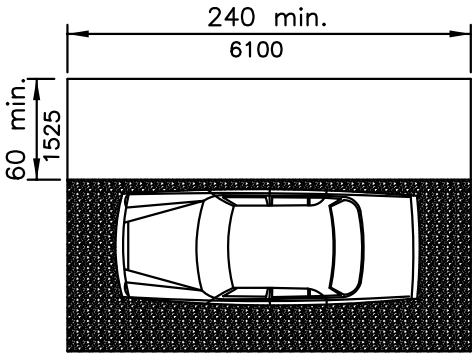

Fig. 10
Access Aisle at Passenger Loading Zones

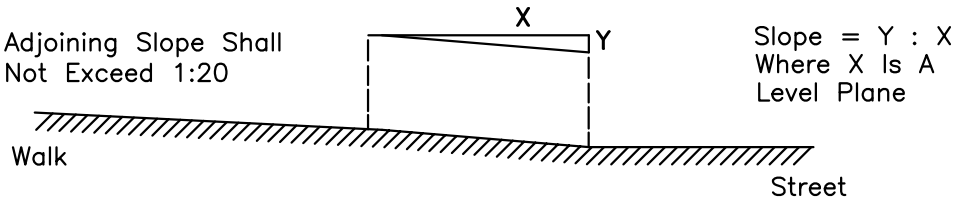

Fig. 11
Measurement Of Curb Ramp Slopes

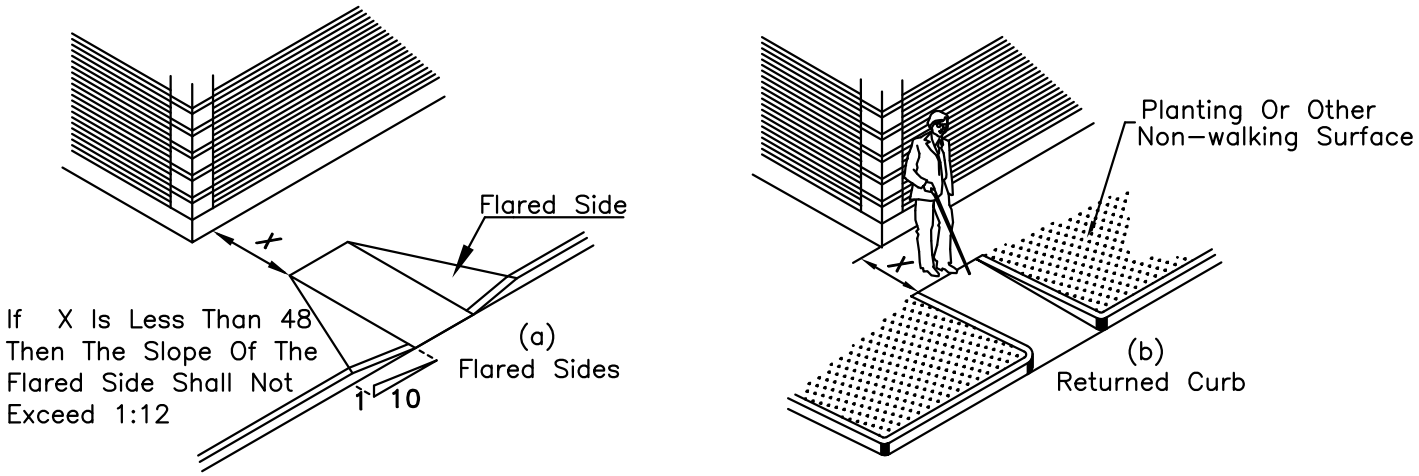

Fig. 12
Sides Of Curb Ramps

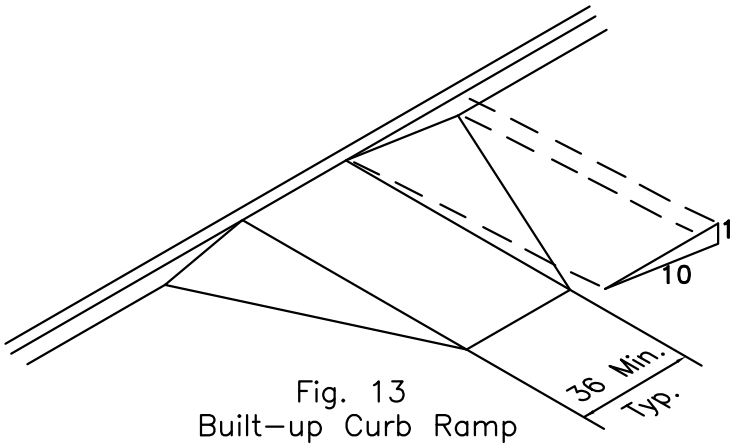

Fig. 13
Built–up Curb Ramp

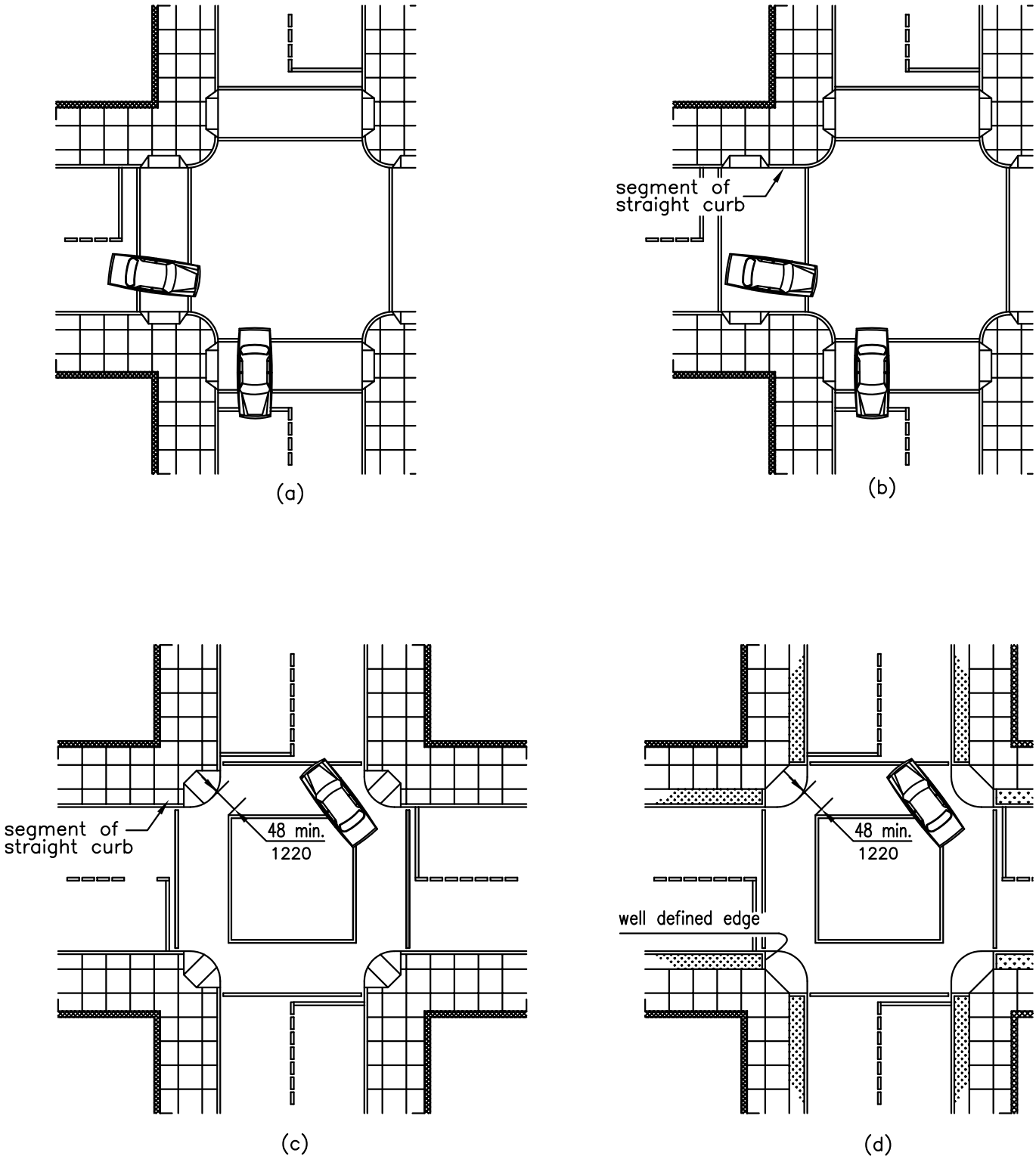

FIG. 15
Curb Ramps at Marked Crossings

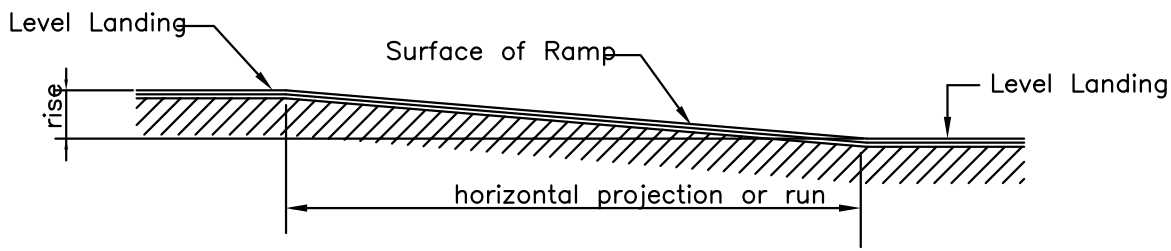

Slope	Maximum Rise		Maximum Horizontal Projection	
	In	mm	ft	m
1:12 to <1:16	30	760	30	9
1:16 to <1:20	30	760	40	12

Fig. 16
Components Of A Single Ramp And Sample Ramp Dimensions

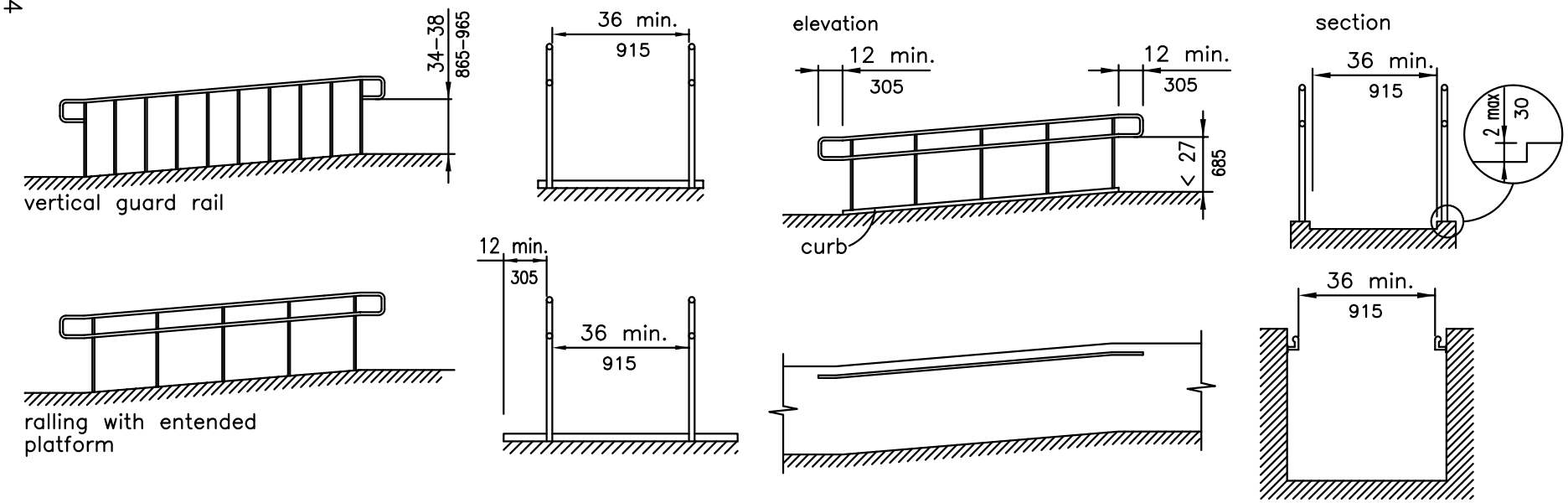

Fig. 17
Examples of Edge Protection and Handrail Extensions

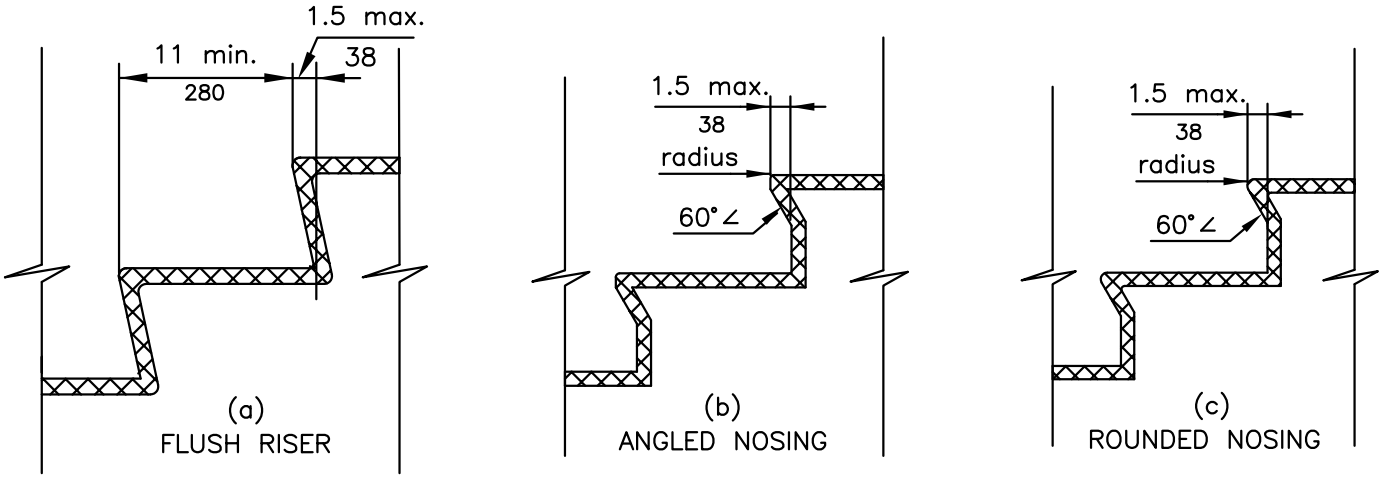

Fig. 18
Usable Tread Width and Examples of Acceptable Nosings

NOTE:
X is the 12 minimum handrail extension required at each top riser.
Y is the minimum handrail extension of 12 plus the width of one tread that is required at each bottom riser.

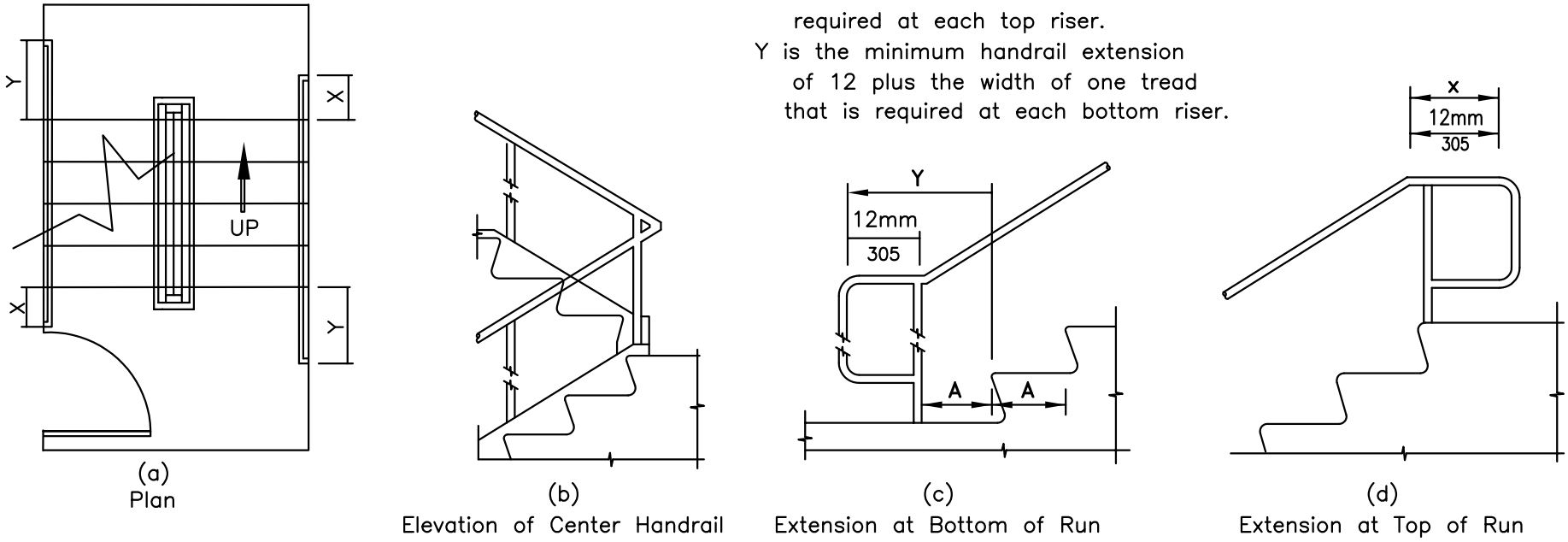

Fig. 19
Stair Handrails

Note: The automatic door reopening device is activated if an object passes through either line a or line b. line a and line b represent the vertical locations of the door reopening device not requiring contact.

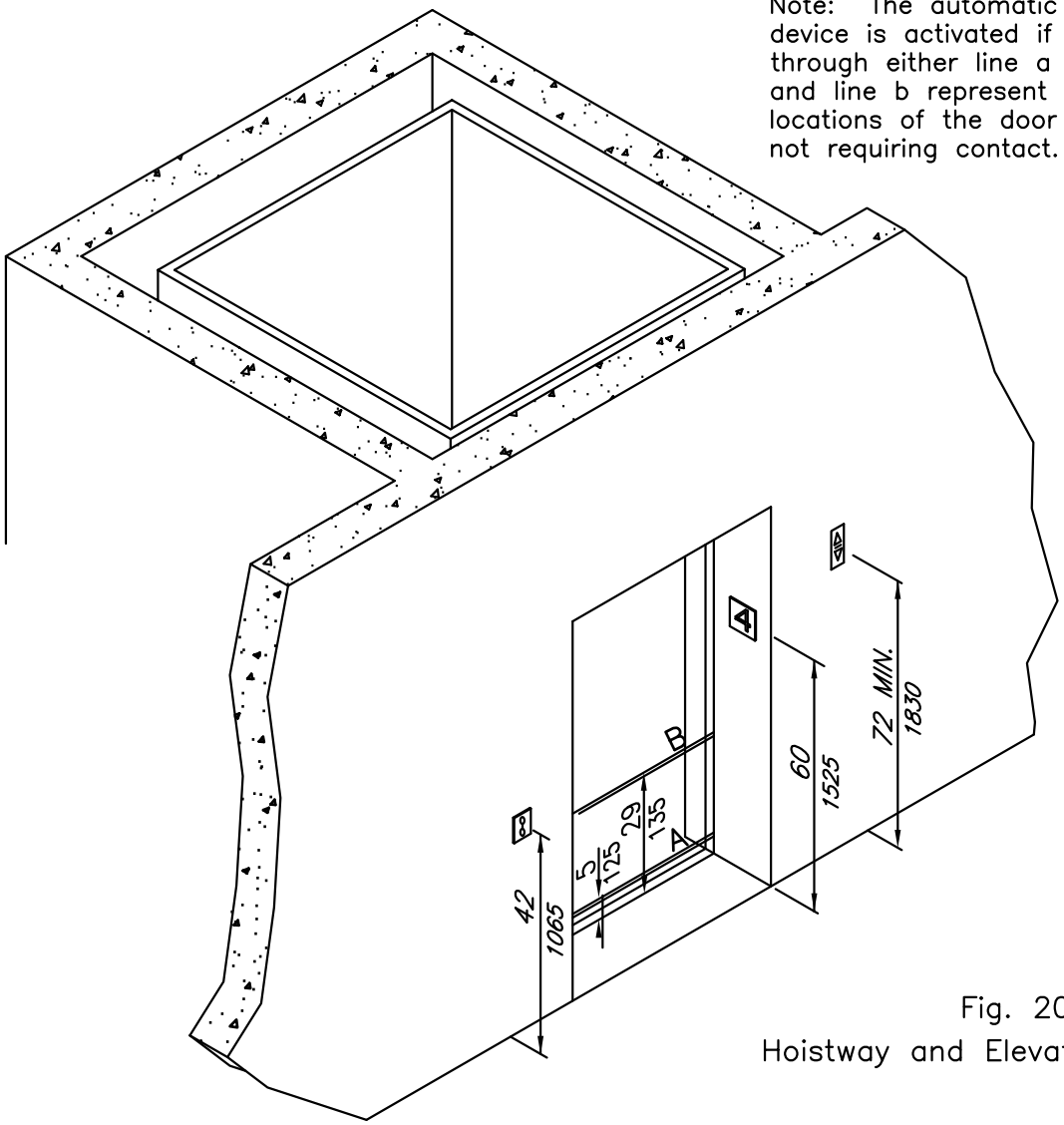

Fig. 20
Hoistway and Elevator Entrances

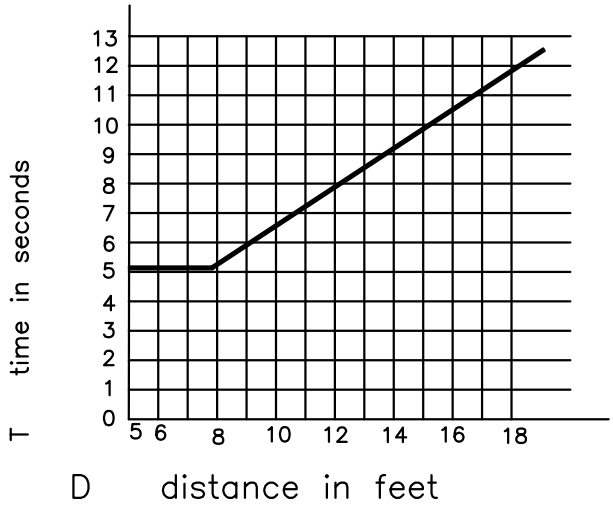

Fig. 21
Graph of Timing Equation

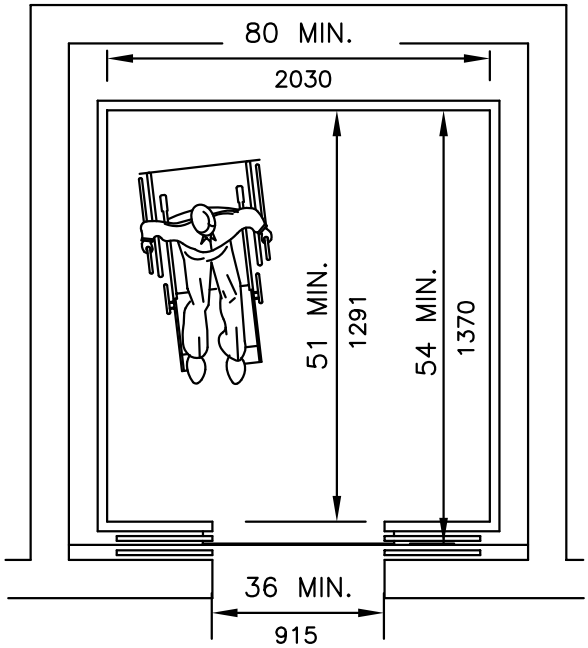

(b)

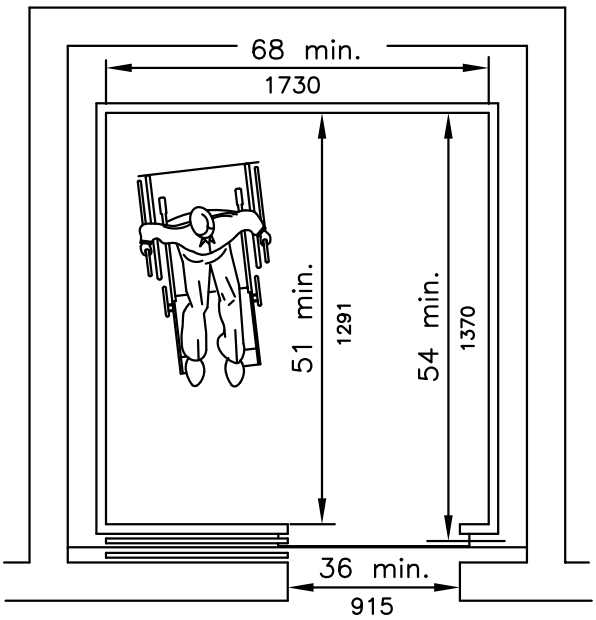

(a)

Fig. 22
Minimum Dimensions of Elevator Cars

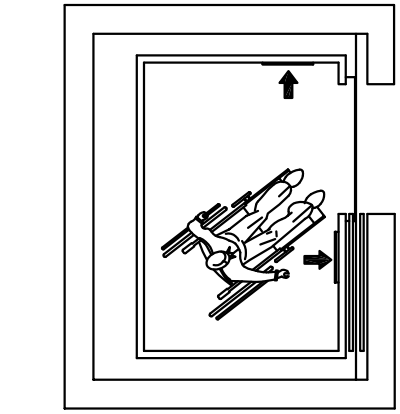

(d)
Alternate Locations of Panel with side opening door

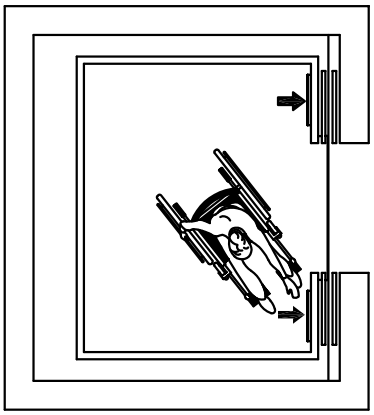

(c)
Alternate Locations of Panel with center opening door

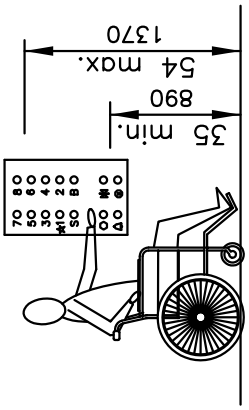

(b)
Car Control Height

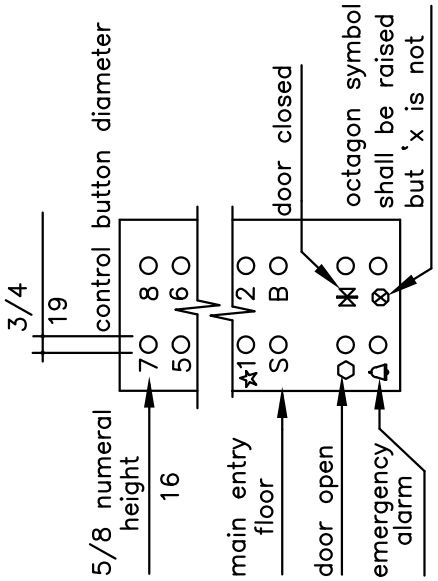

(a)
Panel Detail

Fig. 23
Car Controls

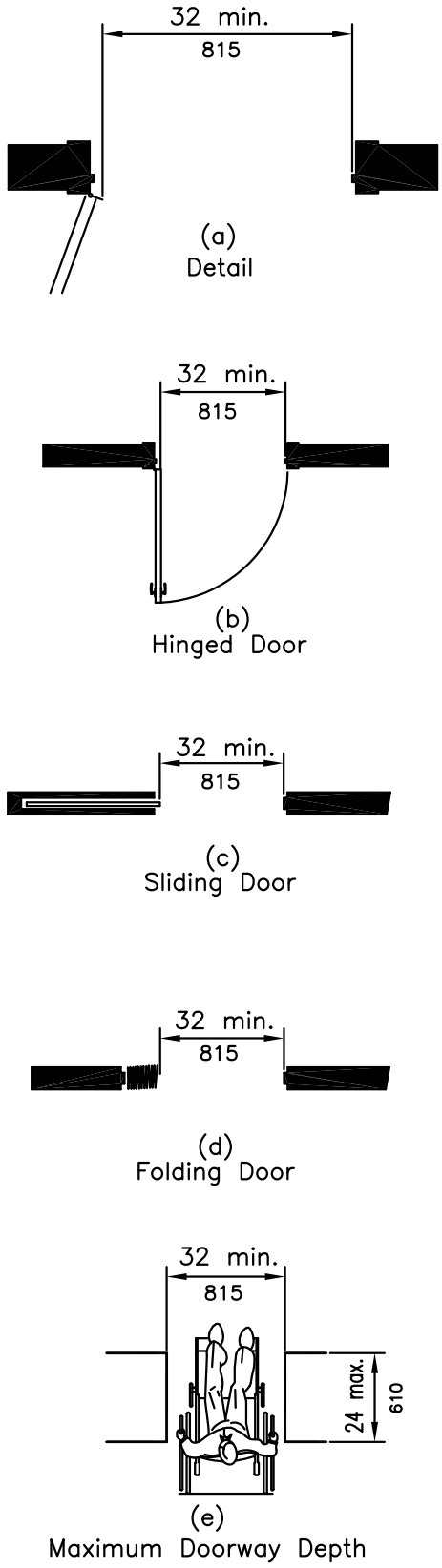

Fig. 24
Clear Doorway Width And Depth

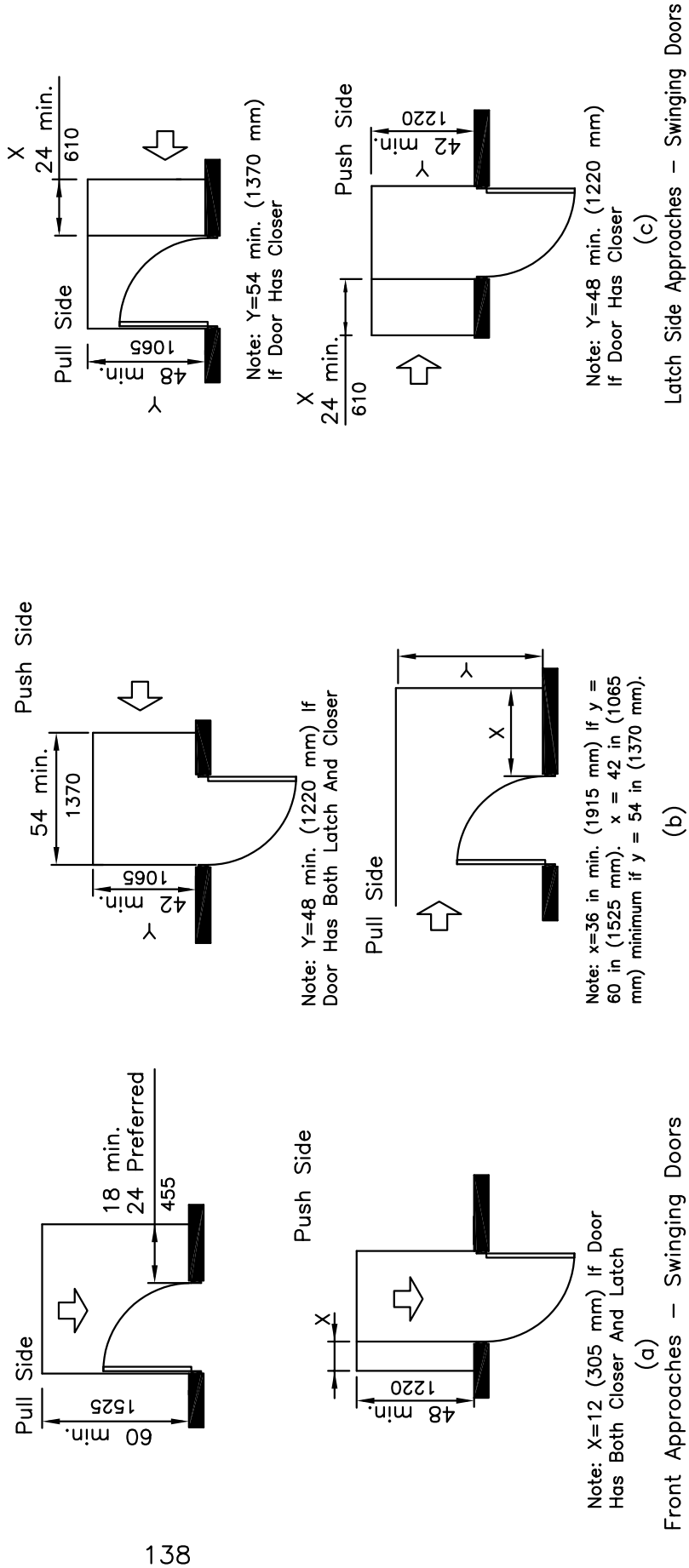

Note: All doors in alchoves shall comply with the clearance fro front approaches

Fig. 25
Maneuvering Clearance at Doors

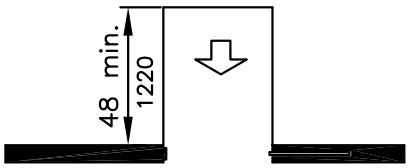

(d)
Front Approaches – Sliding Doors and Folding Doors

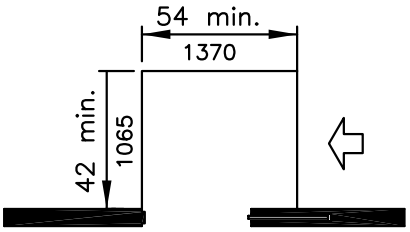

(e)
Slide Side Front Approaches – Sliding Doors and Folding Doors

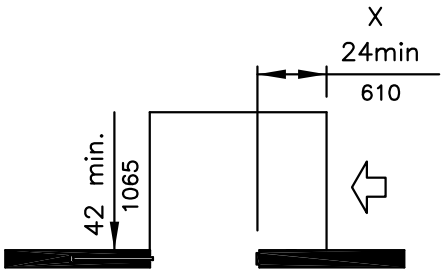

(f)
Latch Side Front Approaches – Sliding Doors and Folding Doors

Note: All Doors In Alcoves Shall Comply With The Clearances For Front Approaches

Fig. 25
Maneuvering Clearances at Doors (Continued)

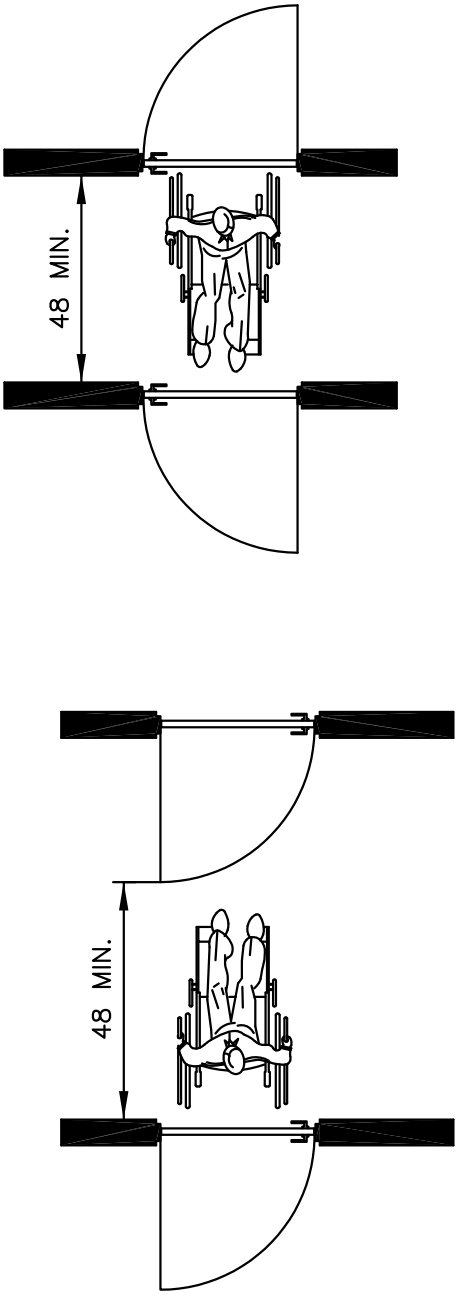

Fig. 26
Two Hinged Doors In Series

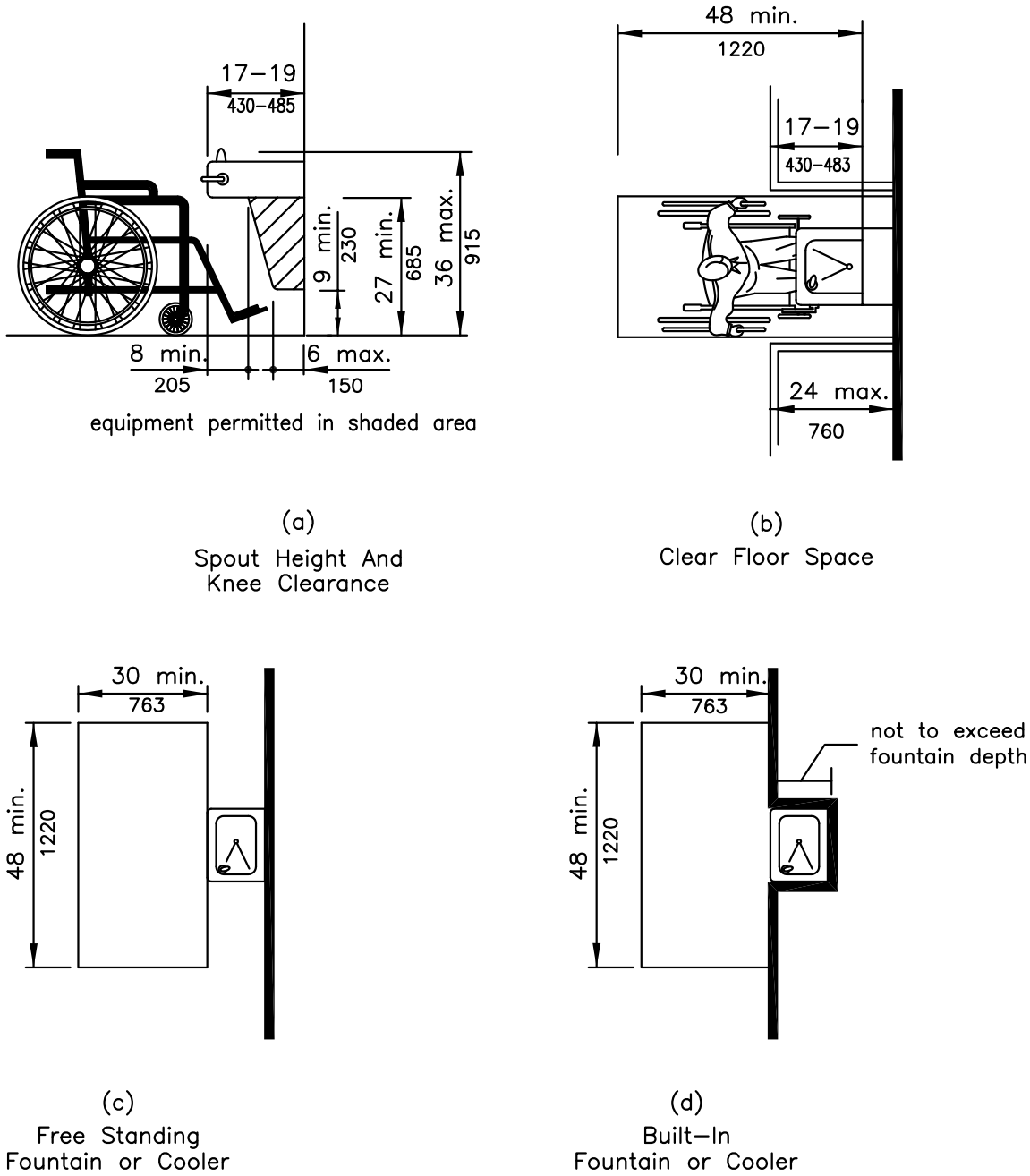

Fig. 27

Drinking Fountains and Water Coolers

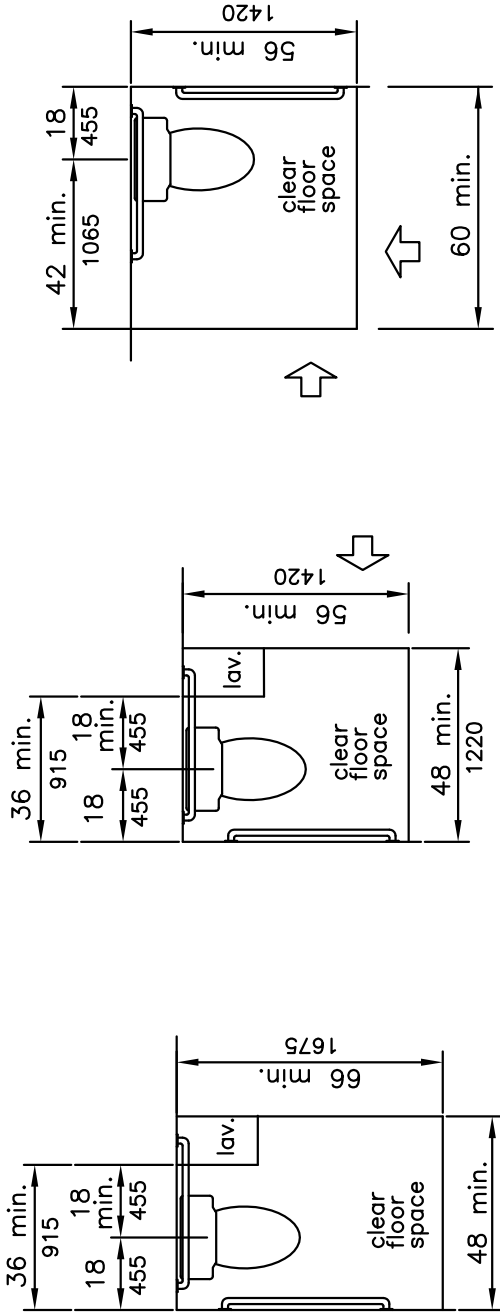

Fig. 28
Clear Floor Space at Water Closets

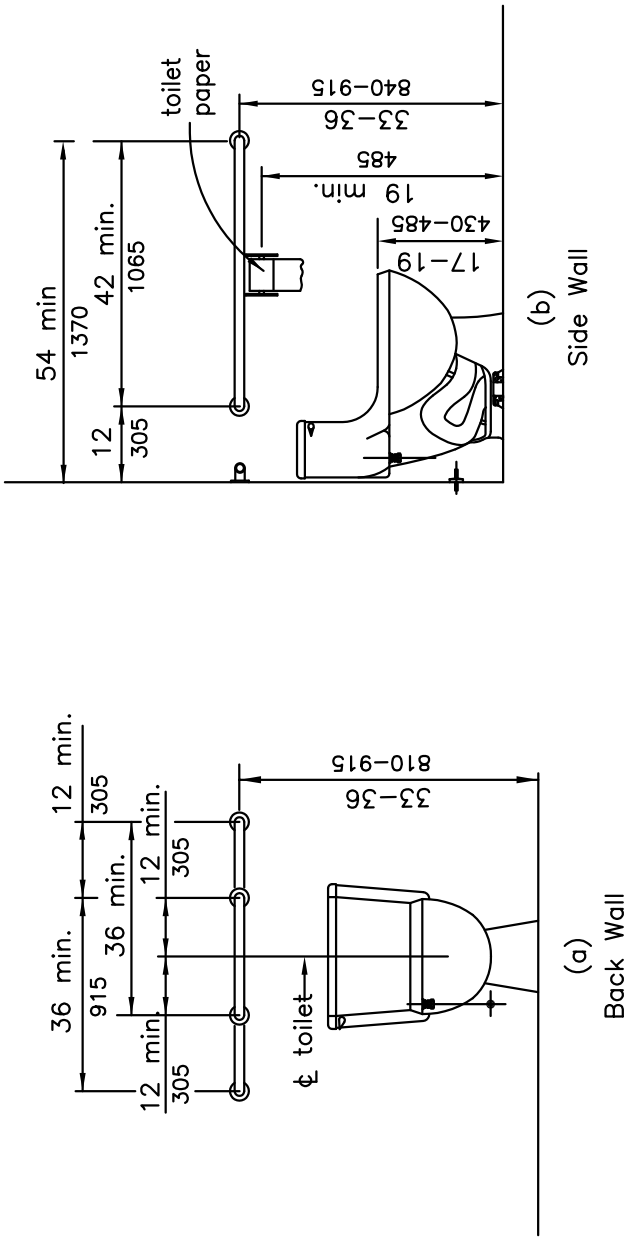

Fig. 29
Grab Bars at Water Closets

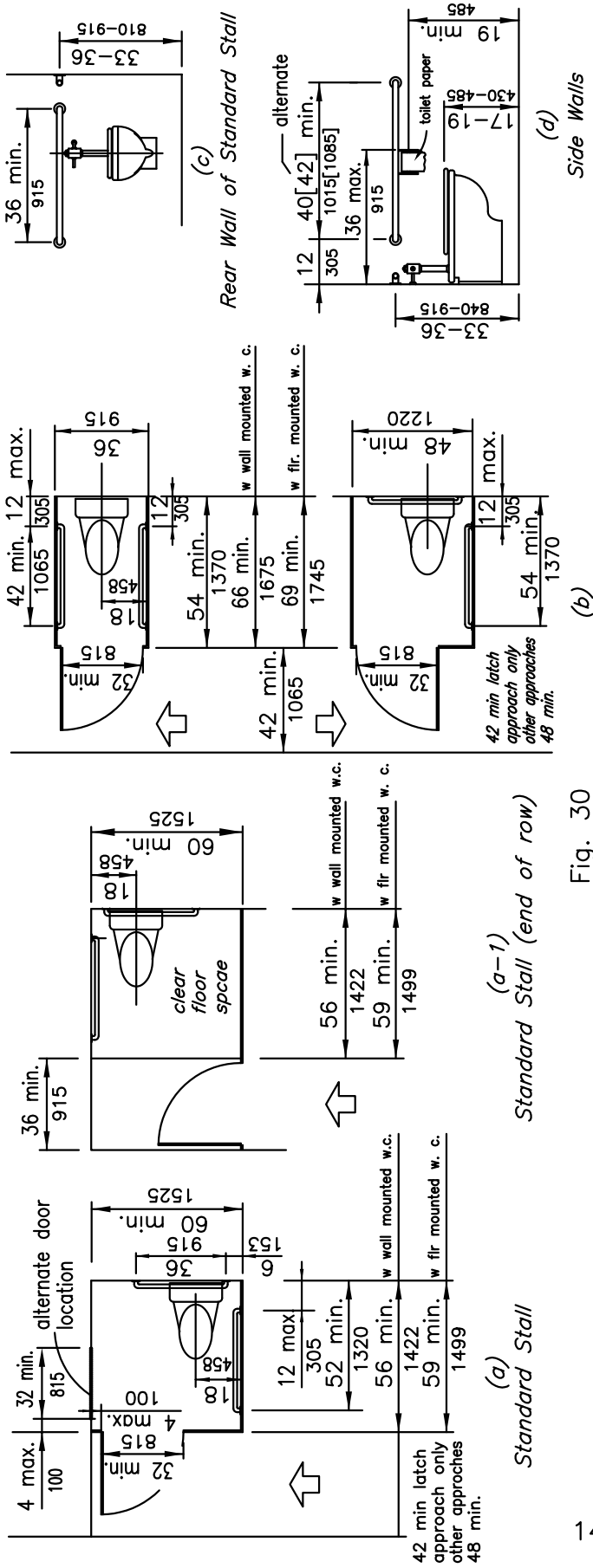

Fig. 30
Toilet Stalls

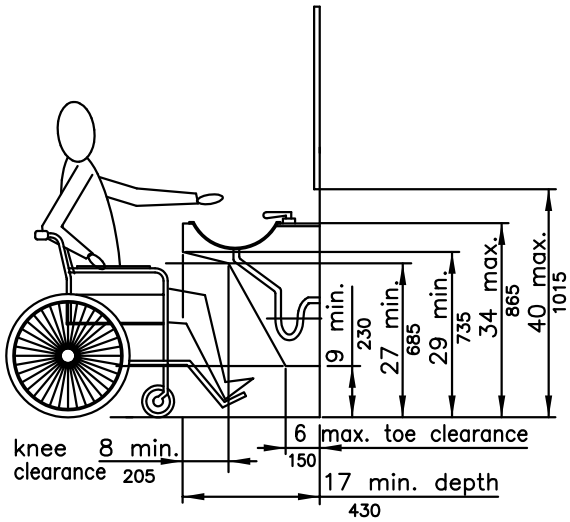

Fig.31
Lavatory Clearances

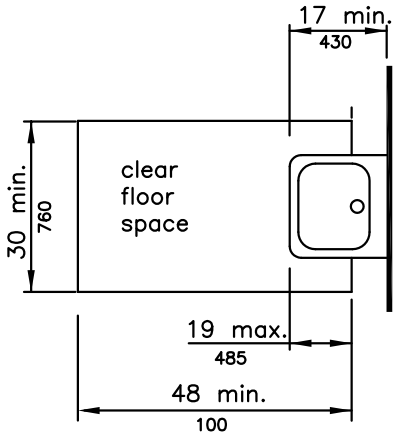

Fig. 32
Clear Floor Space At Lavatories

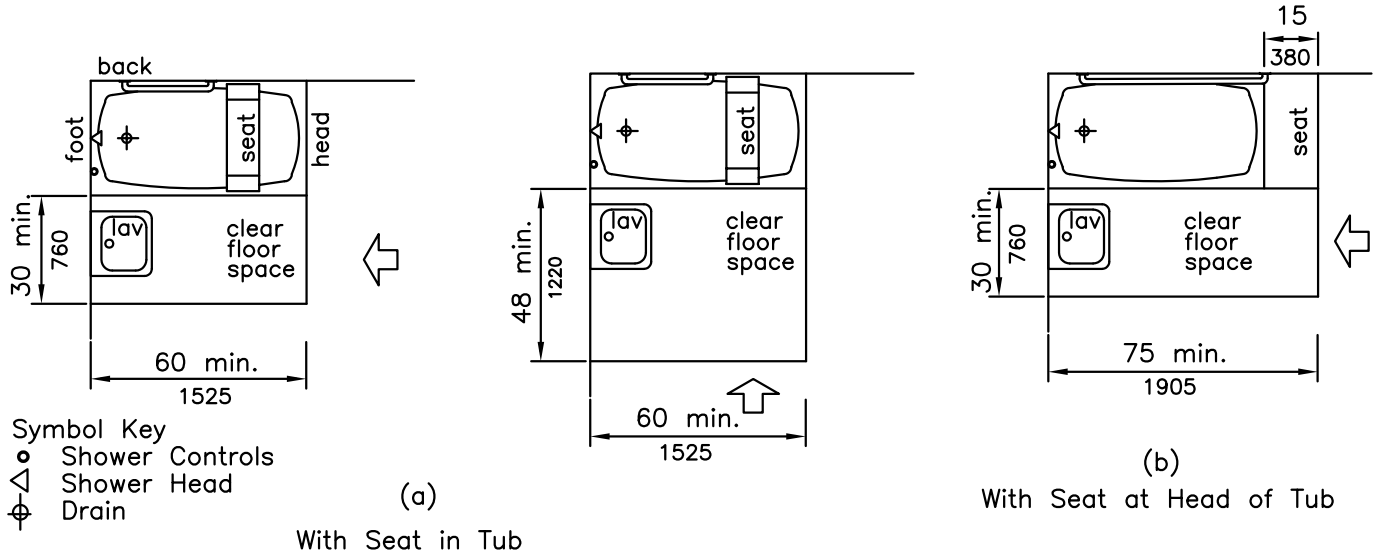

Fig. 33
Clear Floor Space at Bathtubs

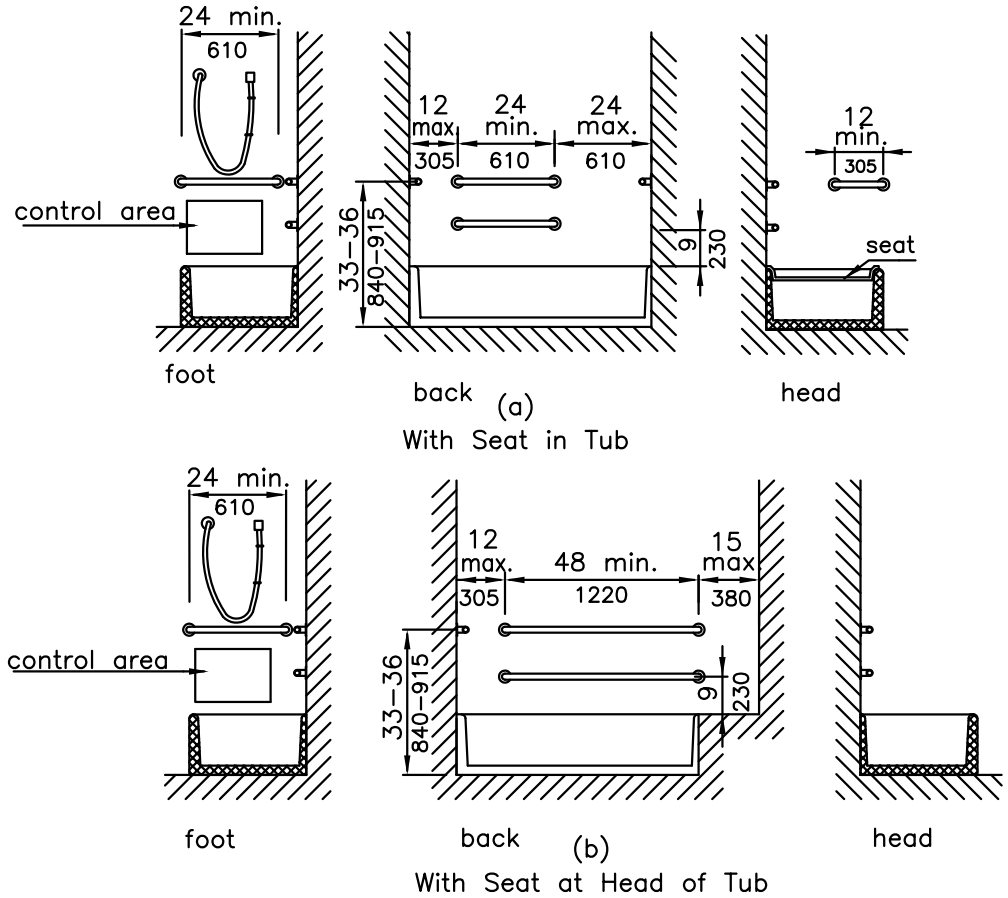

Fig. 34
Grab Bars at Bathtubs

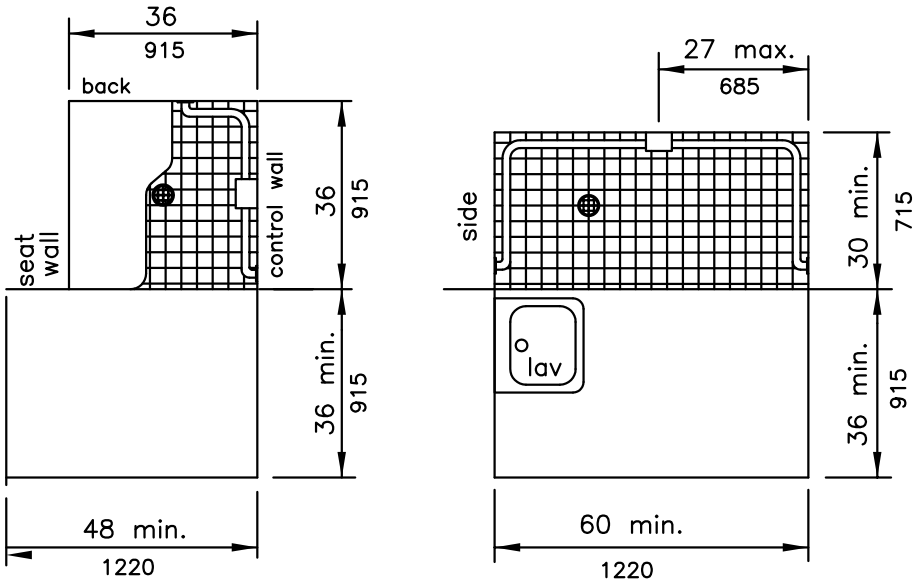

(a)
36–In By 36–In Stall
(915–mm by 915–mm) Stall

(a)
36–In By 60–In Stall
(760–mm by 1525–mm) Stall

Fig. 35
Shower Size and Clearances

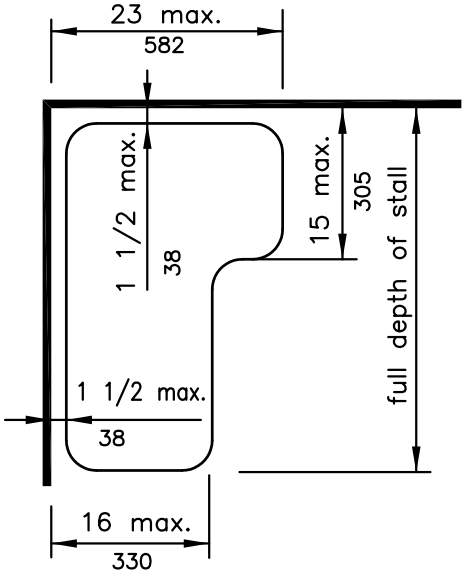

Fig. 36
Shower Seat Design

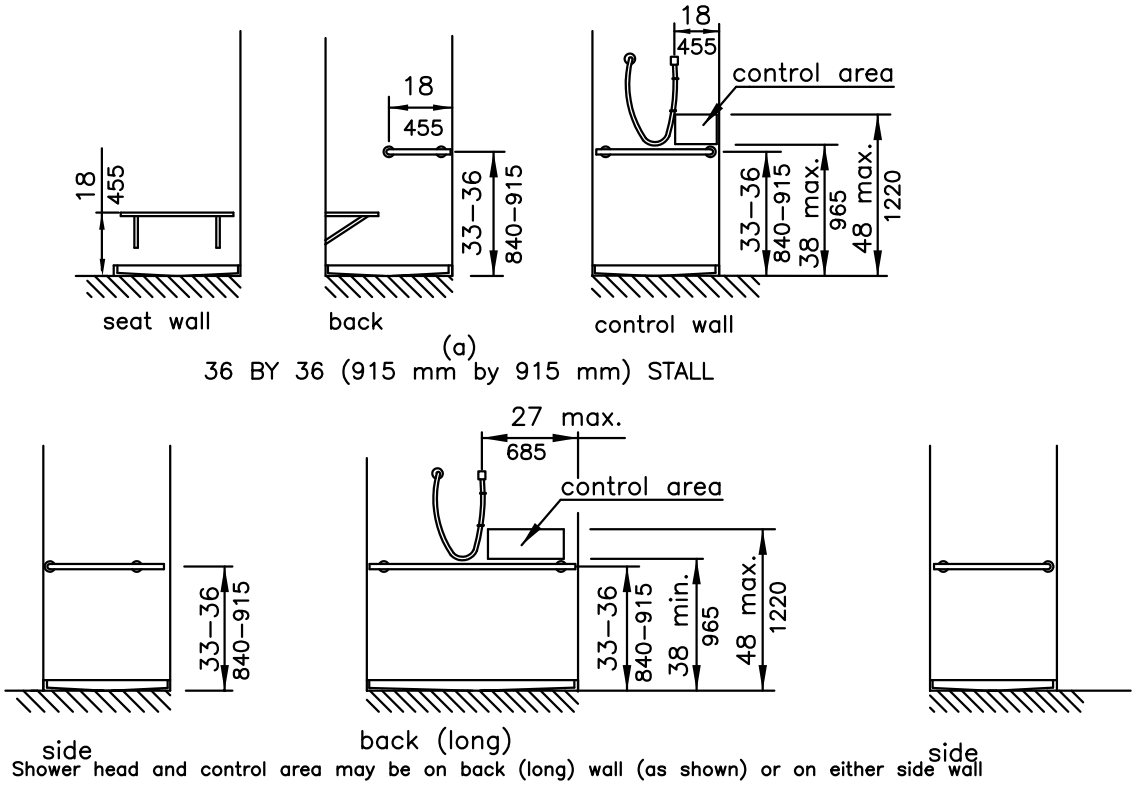

NOTE: Shower head and control area may be on back (long) wall (as shown) or on either side wall

(a)
36 BY 36 (915 mm by 915 mm) STALL

(b)
30 by 60 (760 mm by 1525 mm) Stall

Fig. 37
Grab Bars at Shower Stalls

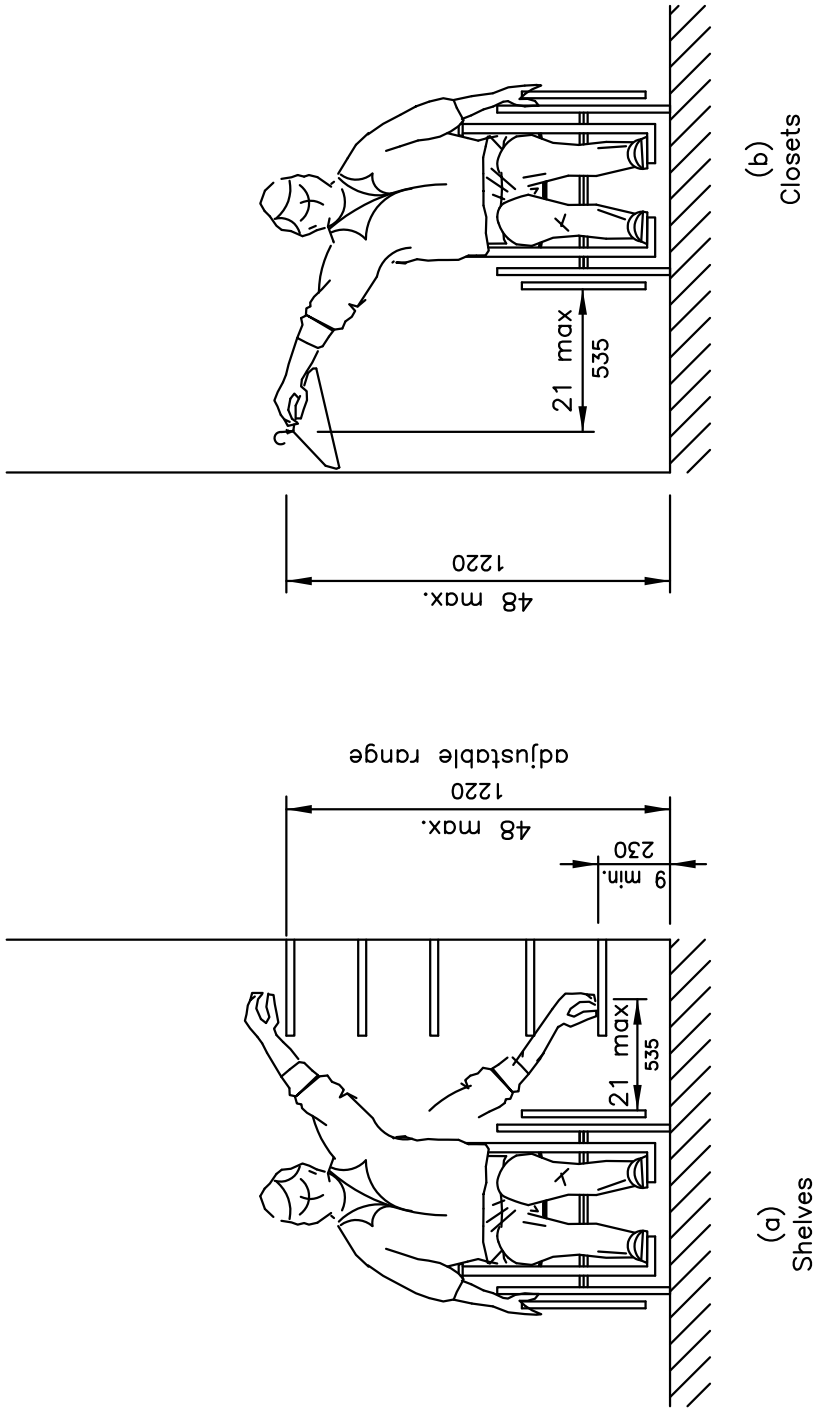

Fig. 38

Storage Shelves and Closets

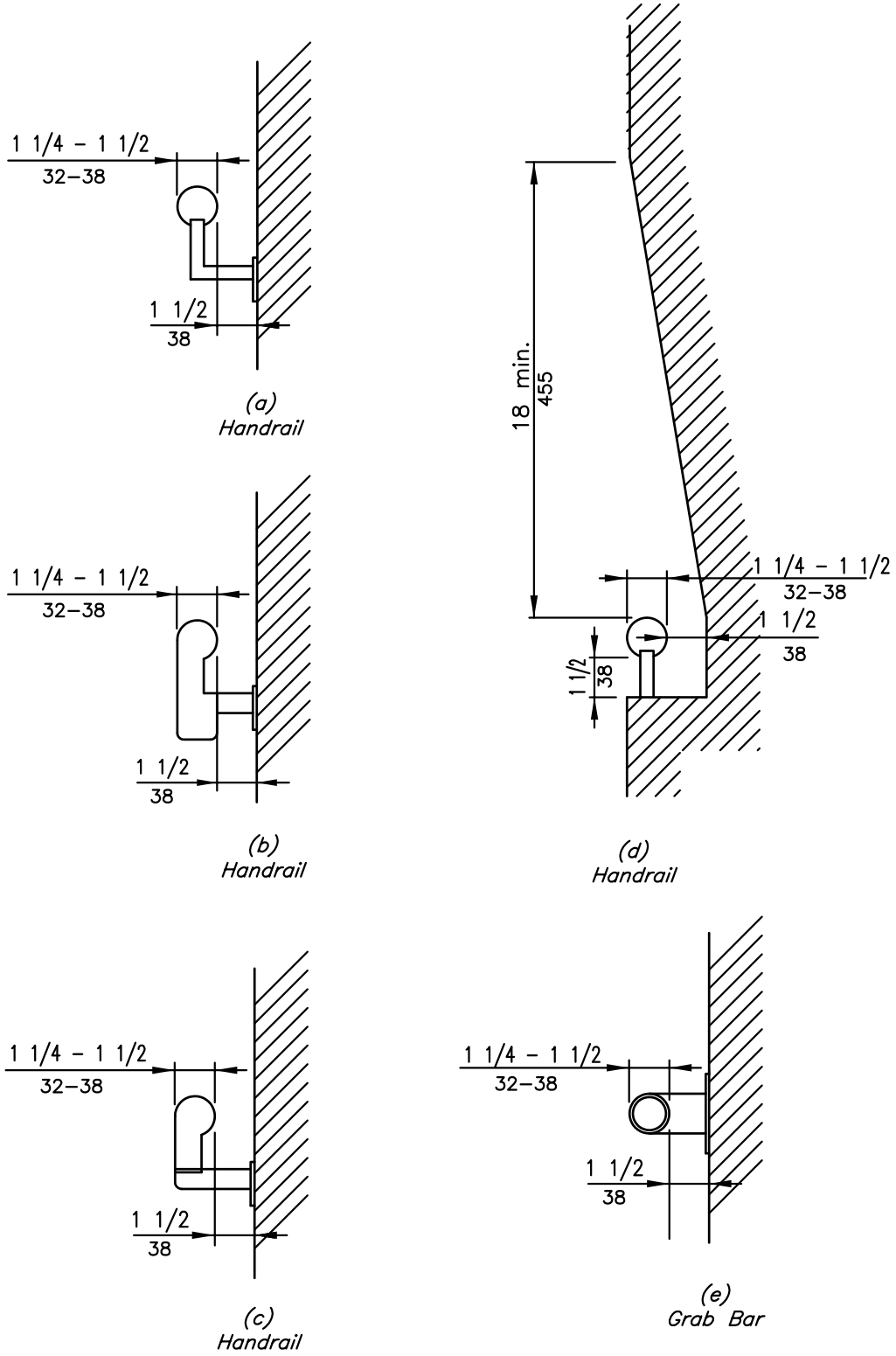

Fig. 39
Size and Spacing of Handrails and Grab Bars

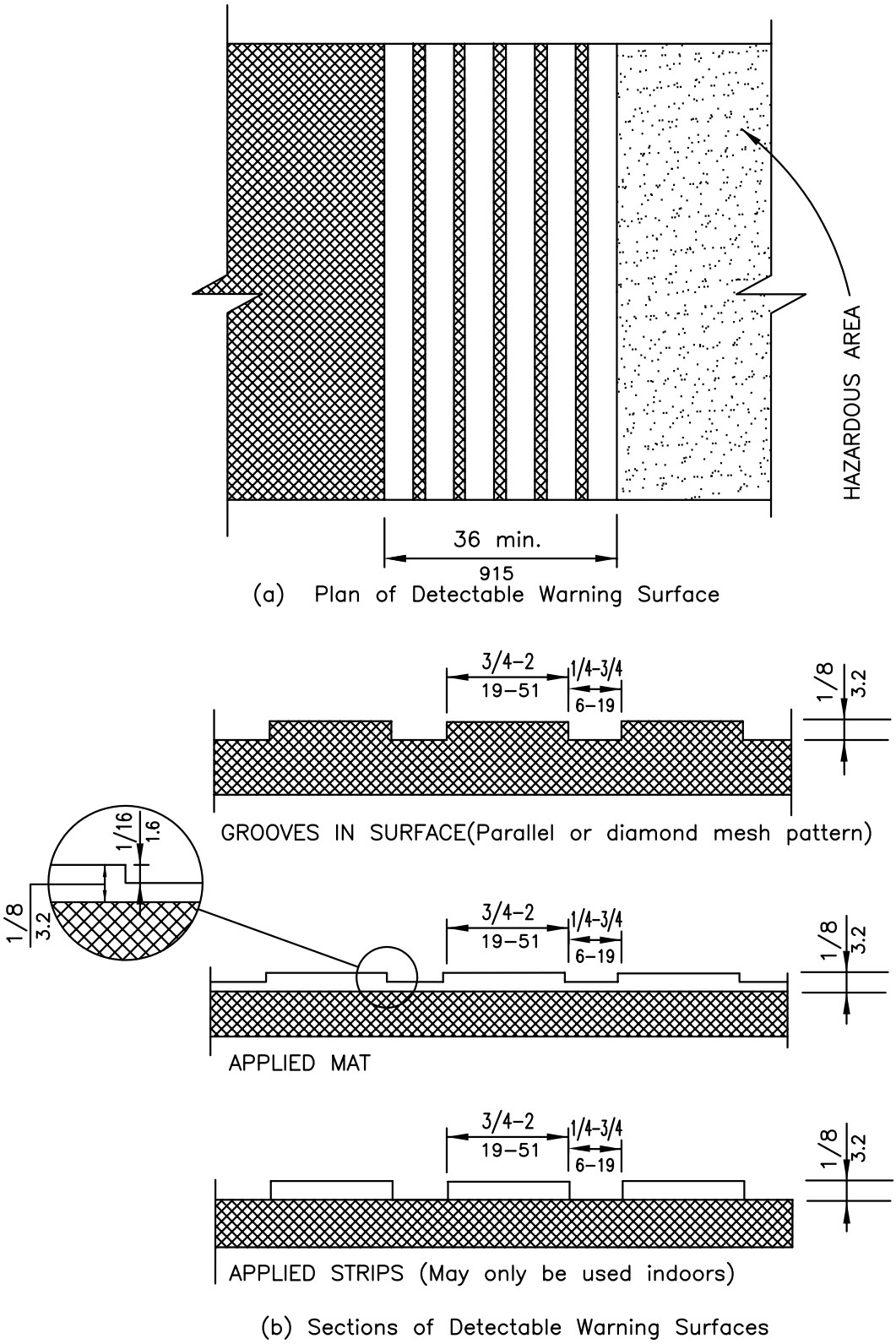

Fig. 40
Strips and Grooves Used as Detectable Warnings on Walking Surfaces

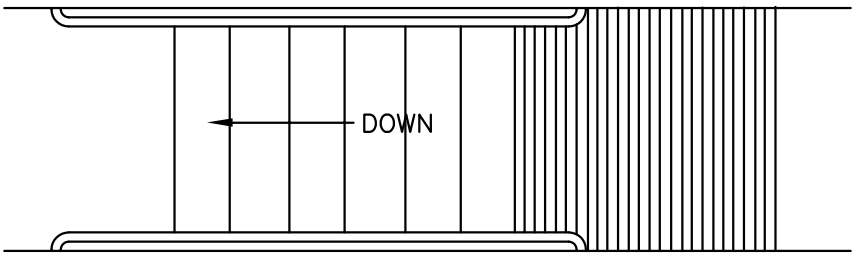

Fig. 41
Detectable Warning At Stairs

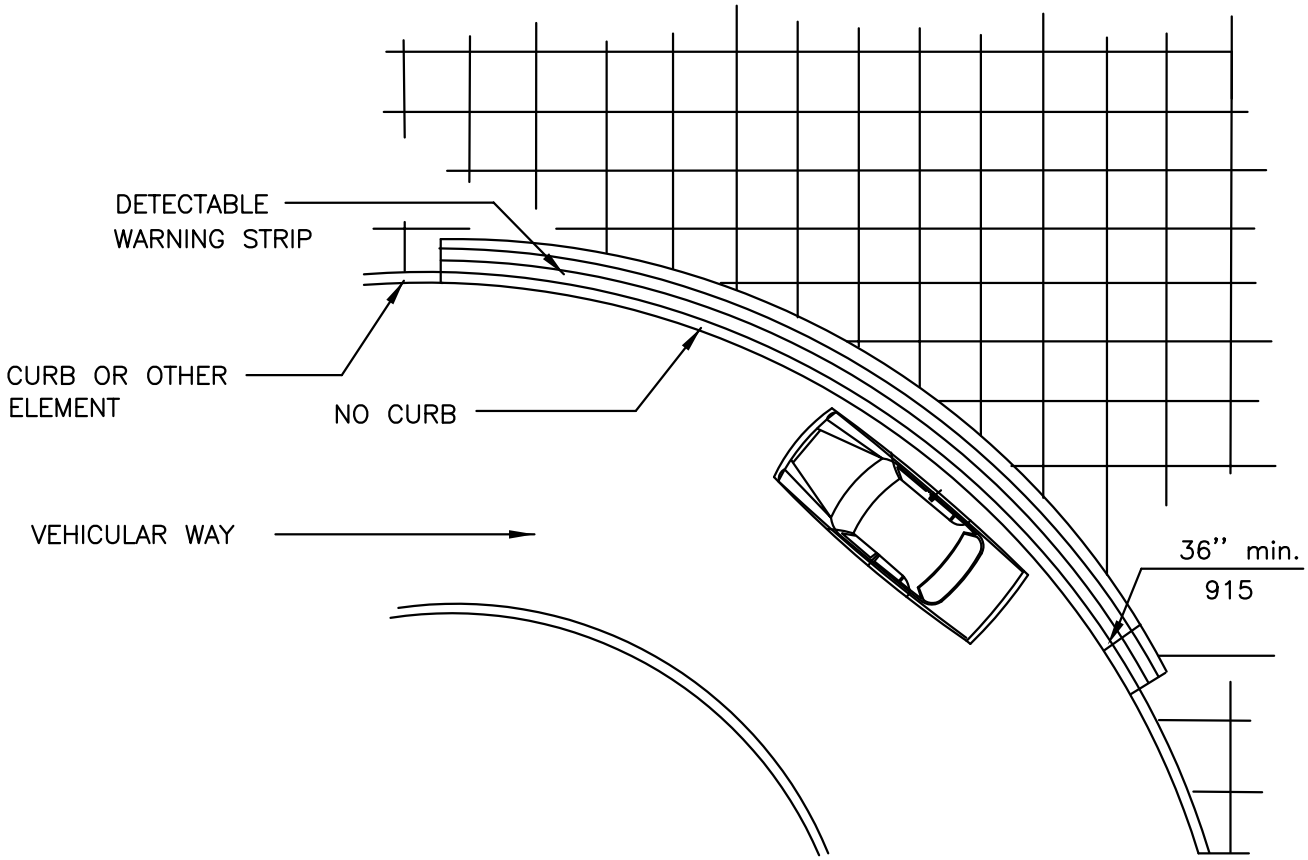

Fig. 42
Detectable Warning At Hazardous Vehicular Areas

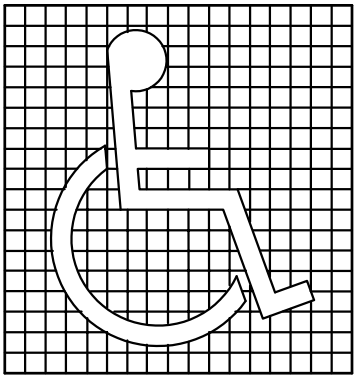

(a)
Proportions
International Symbol of Accessibillity

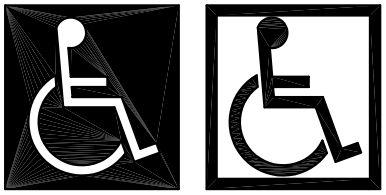

(b)
Display Conditions
International Symbol of Accessibillity

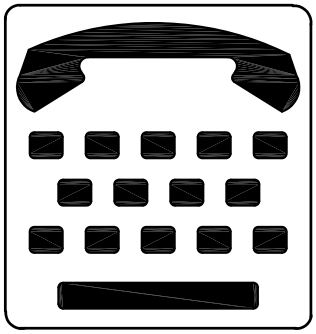

(c)
International TDD Symbol

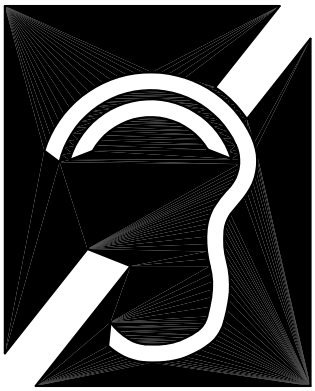

(d)
International Symbol of Access for Hearing Loss

Fig. 43
International Symbols

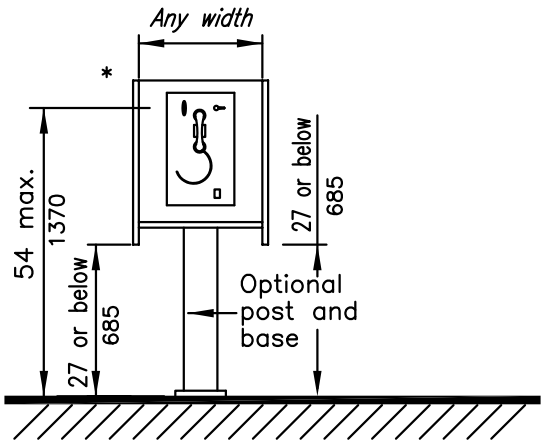

Elevation

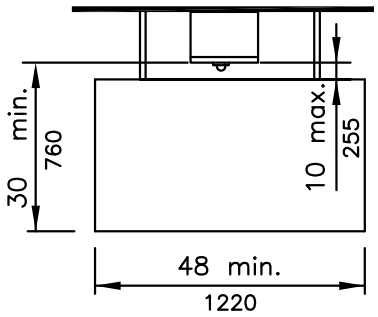

Plan

(a)
Side Reach Possible

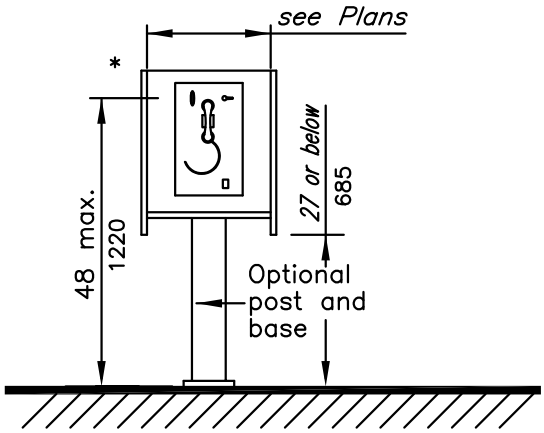

Elevation

*Height to highest operable parts which are essential to basic operation of telephone

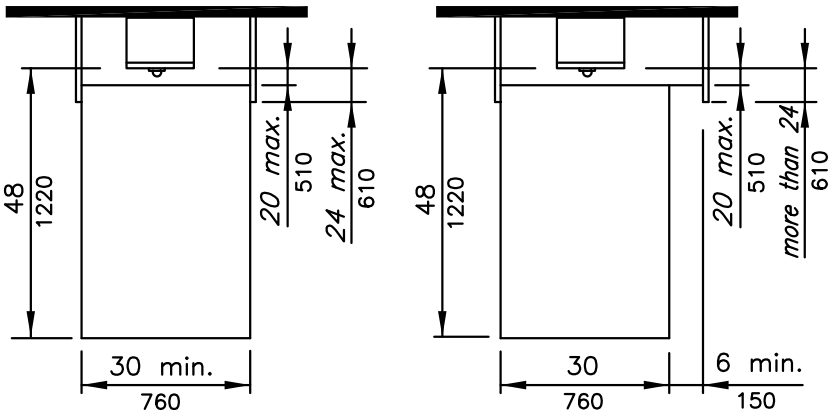

Plans

(b)
Forward Reach Required

Fig. 44
Mounting Heights And Clearances For Telephones

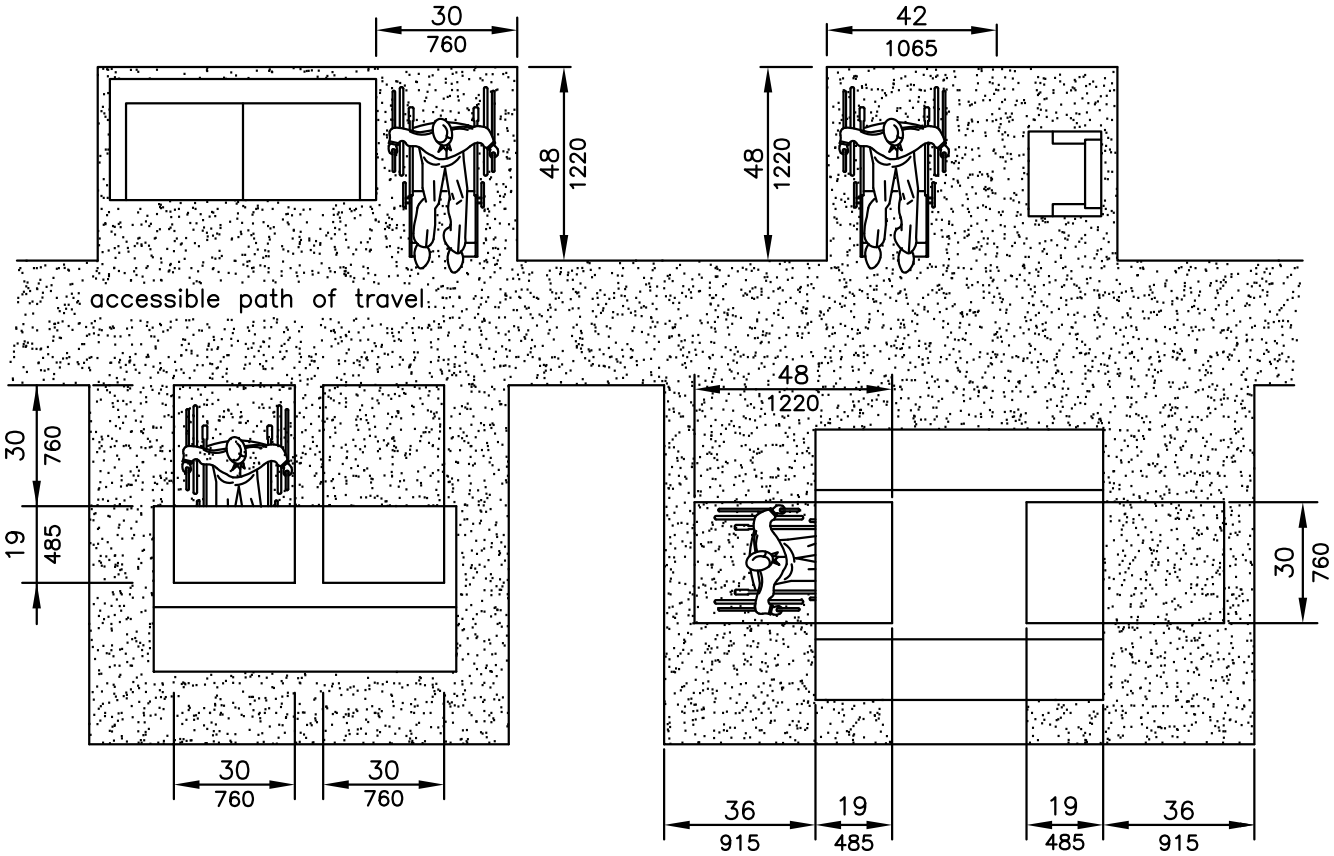

Fig. 45
Minimum Clearances for Seating and Tables

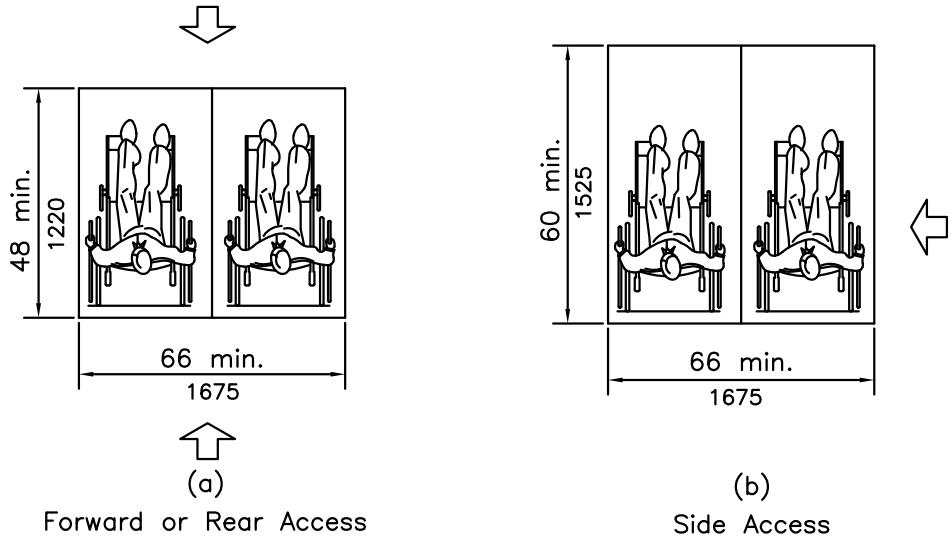

(a)
Forward or Rear Access

(b)
Side Access

Fig. 46
Space Requirements for Wheelchair
Seating Spaces in Series

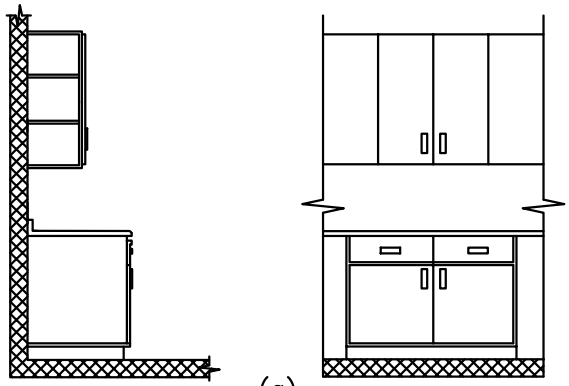

(a)
Before Removal Of Cabinets And Base

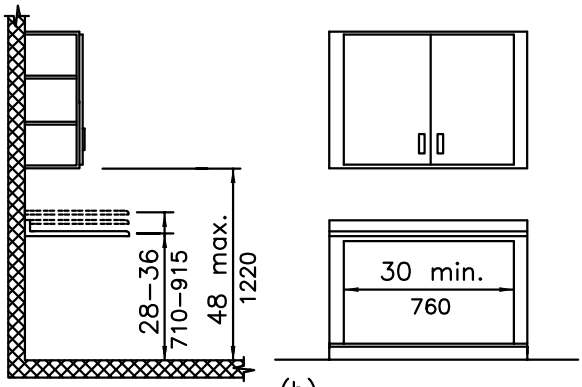

(b)
Cabinets And Base Removed: Height Alternatives

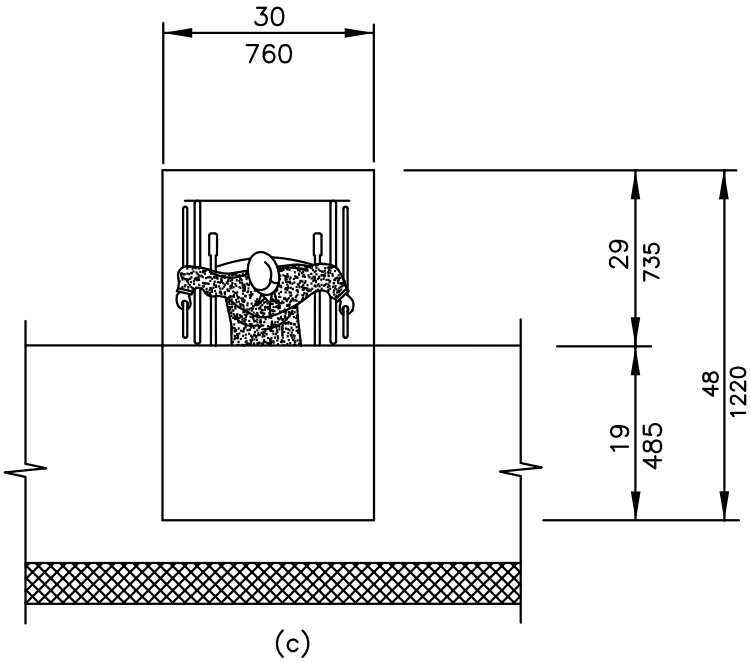

(c)
Clear Floor Space Under Work Surface

Fig. 50
Counter Work Surface

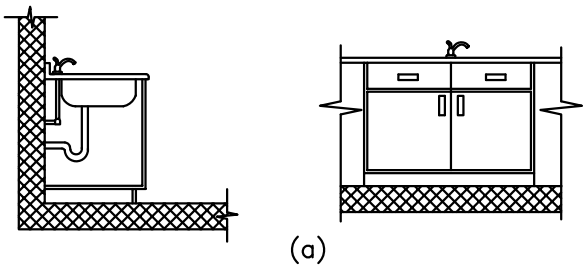

(a)
Before Removal Of Cabinets And Base

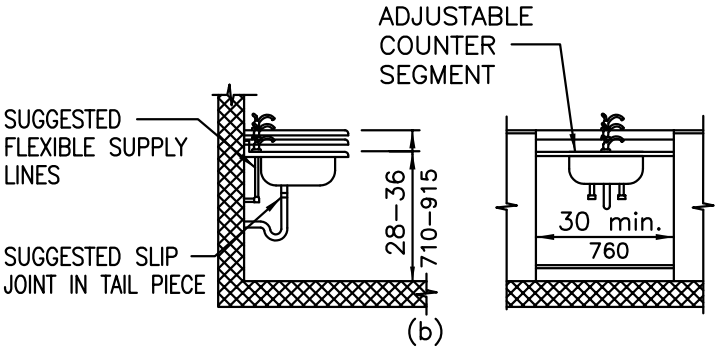

(b)
Cabinets and Base Removed: Height Alternatives

Fig. 51
Kitchen Sink

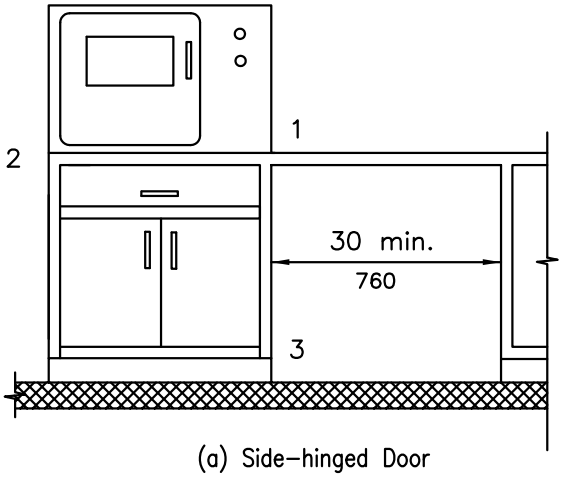

(a) Side–hinged Door

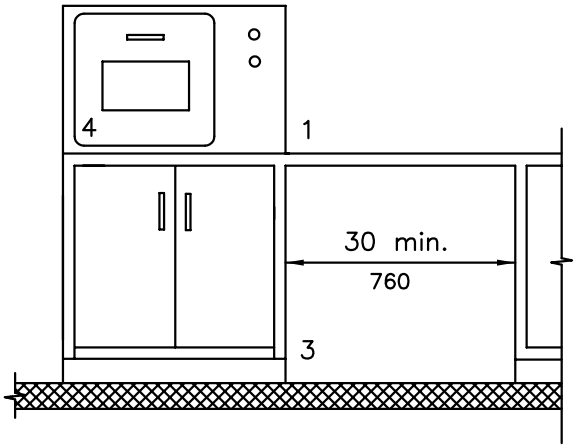

(b) Bottom–Hinged Door

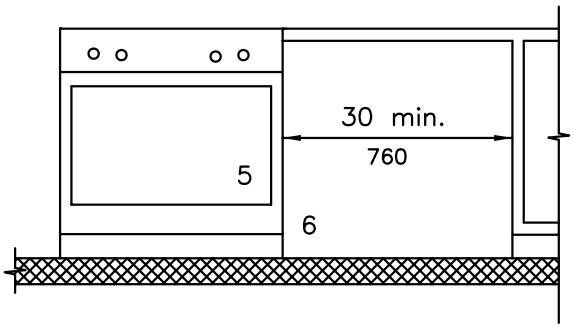

(C) Range Oven

SYMBOL KEY
1. Countertop or wall mounted over
2. Pull–out board with side –opening door
3. Clear open space
4. Botton–hinged door
5. Range oven
6. Preferred clear open space

Fig. 52
Ovens Without Self–cleaning Feature

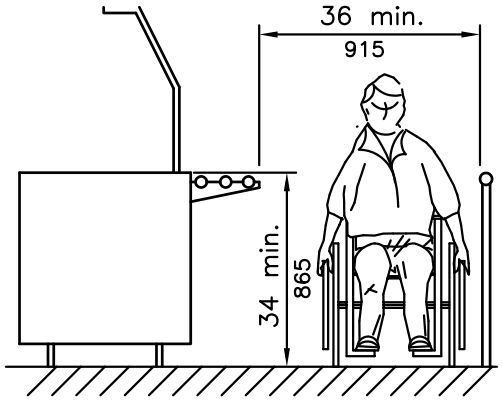

Fig. 53
Food Service Lines

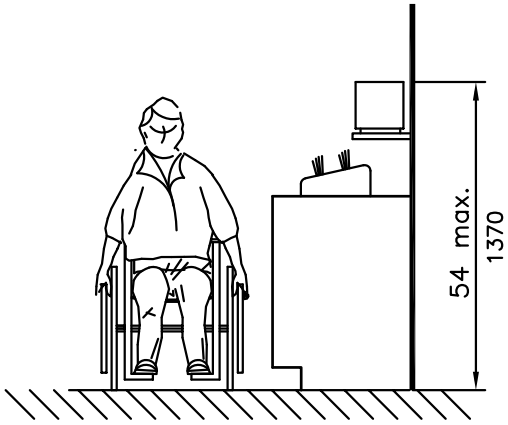

Fig. 54
Tableware Areas

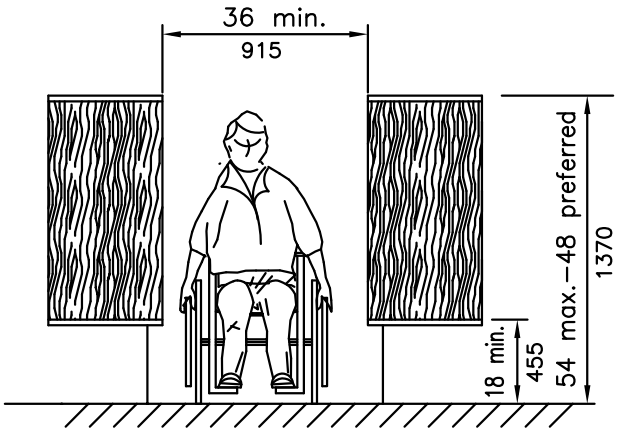

Fig. 55
Card Catalog

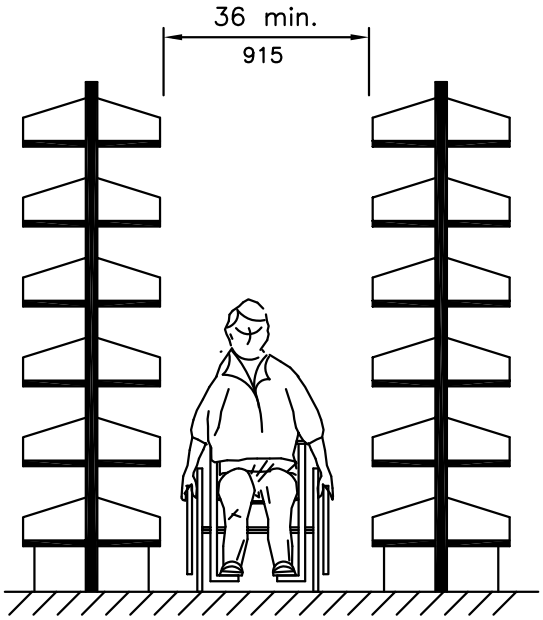

Fig. 56
Stacks

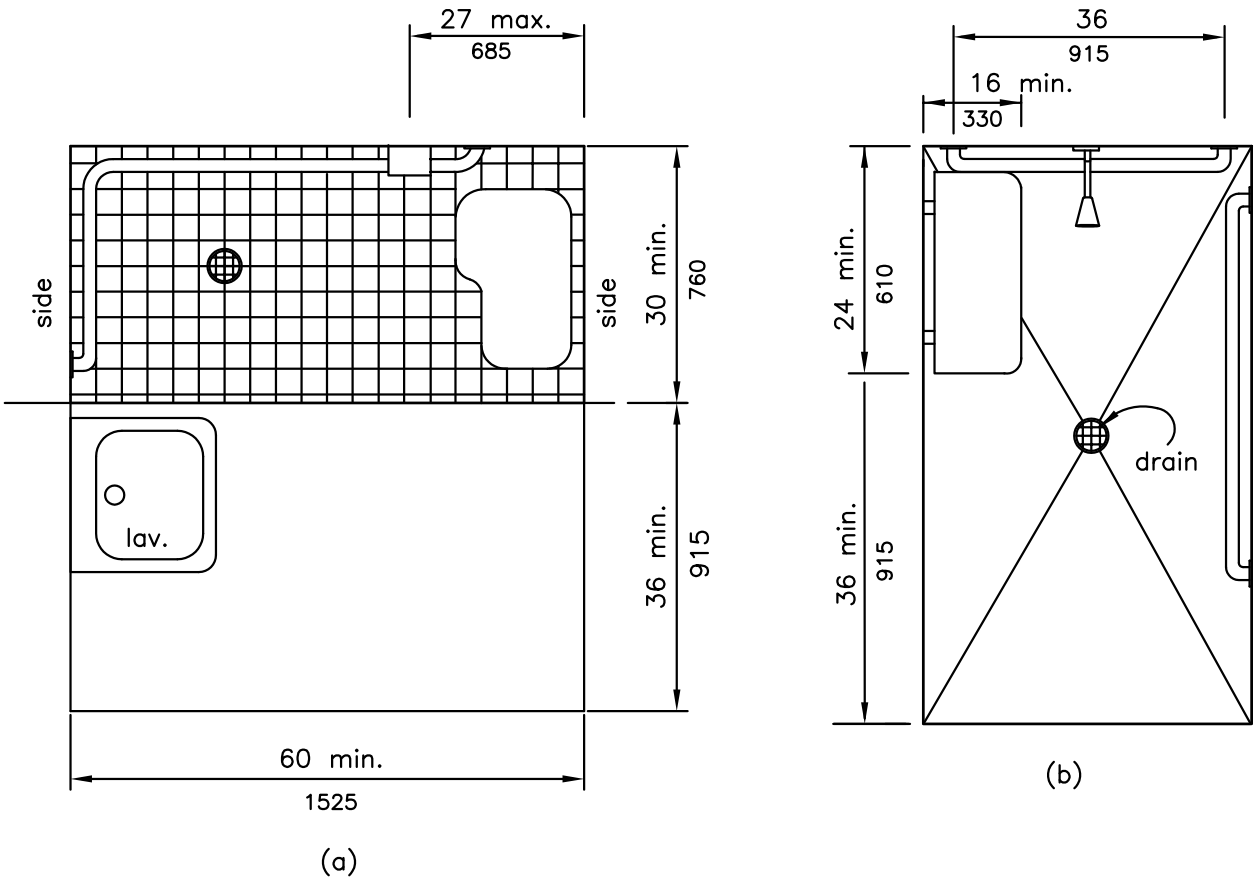

Fig. 57
Roll–in Shower With Folding Seat

Section 400.ILLUSTRATION C "Parking Sign"

HANDICAPPED PARKING SIGN

Effective January 1, 1985, Public Act 83-1316 amended Sec. 11-301 of "The Illinois Vehicle Code" to require Handicapped Parking Signs (for parking lots subject to "The Illinois Vehicle Code") to comply with R 7-8 sign shown below (U.S. Department of Transportation Standard). Existing signs may remain, but their useful lives shall not be extended by other means than normal maintenance.

Note:
This is a standard sign and may be ordered from any traffic sign supplier by number. The arrow should be omitted where there is only one space. The arrow may also be made to point in only one direction. The arrow may also be replaced by "time" such as 9 AM - 5 PM where a part time restriction exists. The sign must be supplemented with the Illinois Standard R7-I101 plate giving the amount of the fine for illegally parking in the reserved space(s).

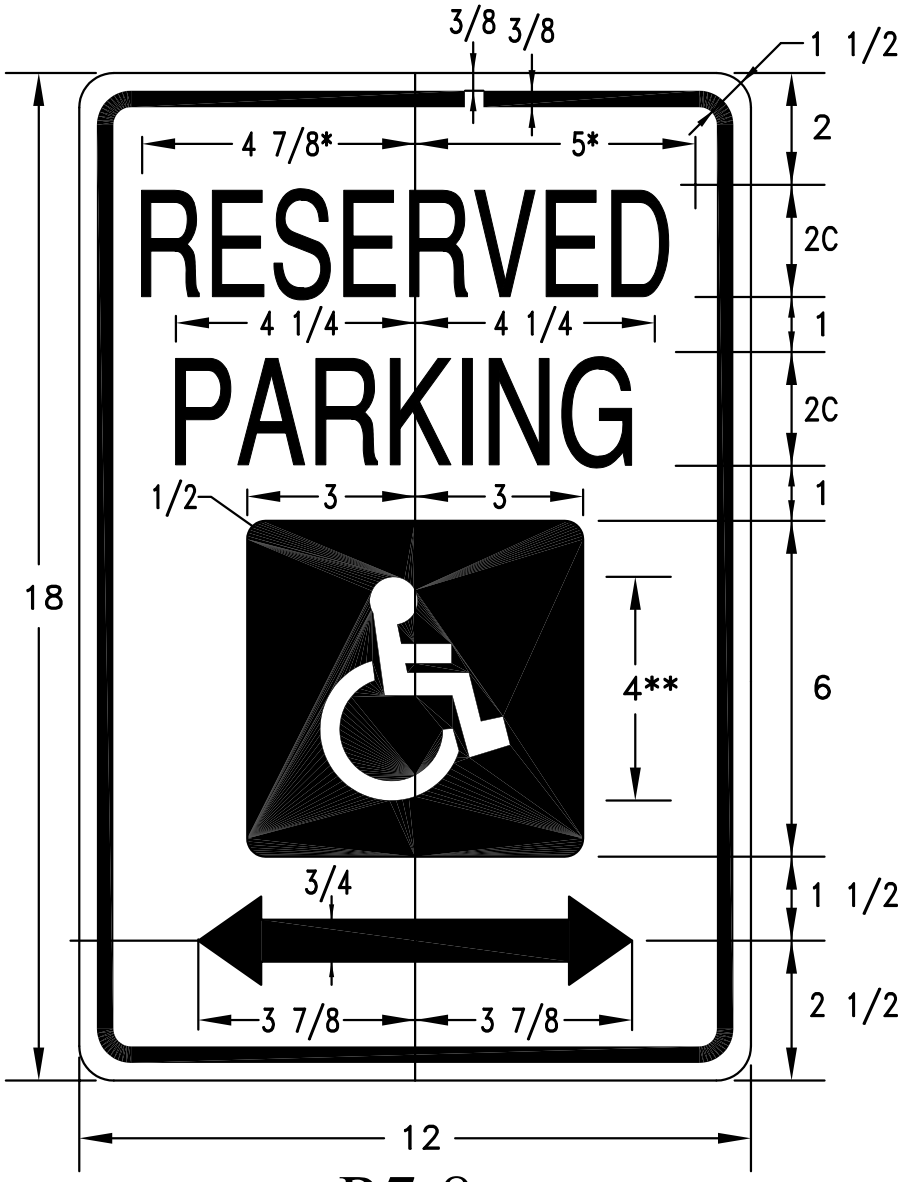

R7-8

DIMENSIONS (INCHES)

COLORS

LEGEND AND BORDER—PANTONE 340C
WHITE SYMBOL ON PANATONE 286 BACKGROUND
BACKGROUND—WHITE

* REDUCE SPACING 80%

Rev. 12/95

Section 400.ILLUSTRATION D "$100 Fine" Sign

Reproduced with permission from the American National Standards Institute.

ILLINOIS STANDARD
R7-I101

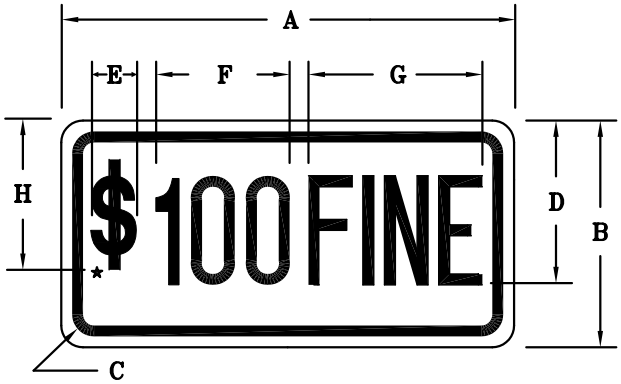

COLOR: LEGEND AND BORDER GREEN NON-REFLECTORIZED (PANTONE 340C)

BACKGROUND WHITE REFLECTORIZED

SIGN SIZE	DIMENSIONS							
	A	B	C	D	E	F	G	H
12 x 6	12.0	6.0	1.5	4.5	1.19	3.53	4.6	4.0

SIGN SIZE	SERIES / LINES	MAR-GIN	BOR-DER	BLK STD.
	1			
12 x 6	3A	0.37	0.37	B5-126

All Dimensions in Inches
To be used with R7-8
*$=Series 3A "s"

Where a fine in excess of $100 is established by an Municipality By Ordinance in accordance with the statutes, the actual amount of the fine should be shown.

This plate may be mounted directly below the R7-8 sign or combined with that sign on a single 12-inch by 24-inch panel.

Note: For a fine of $200, use F=4.0 and G=4.0 (reduce letter to letter spacing as necessary to fit).