ROCK ISLAND COUNTY SUBDIVISION RESOLUTION

(ADOPTED OCTOBER 18, 1994)

Prepared with Assistance from:

Bi-State Regional Commission

Printed September 1994

TABLE OF CONTENTS

ARTICLE I

General Provisions — Page Number

Section 10. Authority and Title..... 1
Section 11. Purpose..... 1
Section 12. Jurisdiction..... 1
Section 13. Exceptions..... 2
Section 14. Variances..... 3

ARTICLE II

Definitions

Section 20. Construction of Terms.....4
Section 21. Selected Definitions..... 4

ARTICLE III

Plats/Plans

Section 30. Pre-Filing Conference..... 9
Section 31. Preliminary Plats..... 9
Section 32. Improvement Plans..... 11
Section 33. Final Plat..... 16

ARTICLE IV

Fees/Amendments

Section 40. Fees..... 18
Section 41. Amendments.....18

Index of Appendixes..... 20

SUBDIVISION RESOLUTION
FOR
ROCK ISLAND COUNTY, ILLINOIS

A RESOLUTION AUTHORIZING, ESTABLISHING AND PROVIDING FOR THE ORDERLY SUBDIVIDING, PLATTING AND DEVELOPMENT OF LAND AND PROPERTIES WITHIN THE UNINCORPORATED AREA OF ROCK ISLAND COUNTY, ILLINOIS.

BE IT AND IT IS HEREBY RESOLVED BY THE COUNTY BOARD OF ROCK ISLAND COUNTY, ILLINOIS:

Article I

GENERAL PROVISIONS

Section 10 AUTHORITY AND TITLE

This Resolution is adopted in pursuance of the authority granted by the 1992 Compiled Statutes of the State of Illinois, 55 ILCS 5/5-1041. This Resolution shall be known and may be cited and referred to as the "Subdivision Resolution of Rock Island County, Illinois".

Section 11 PURPOSE

The standards provided herein are necessary for promoting carefully considered, harmonious development of the Unincorporated area of Rock Island County, Illinois. Benefits to be gained by following the standards of this Resolution are;

11.01 To preserve, protect, and promote the public health, safety and welfare.

11.02 To preserve the natural beauty and topography to the maximum feasible extent.

11.03 To conserve and increase the value of land, improvements, and buildings.

11.04 To provide safe and convenient access to new developments and to avoid traffic congestion by requiring the proper location, design and construction of streets.

11.05 To provide a pleasant living environment by furthering the orderly layout and use of land; and to create an environment conducive to the productive development of the Unincoprorated area of Rock Island County, Illinois.

Section 12 JURISDICTION

This Resolution shall be applicable within the Unincorporated area of Rock Island County, Illinois. In instances where the proposed subdivision is located within one and one half (1.5) miles of an incorporated municipality with a formal subdivision ordinance,

the incorporated municipality shall have opportunity to review the proposed subdivision. In instances where two or more incorporated municipalities with formal subdivision ordinances are located within one and one half (1.5) miles of the proposed subdivision, all such incorporated municipalities shall have opportunity for review. Proposed subdivisions that require review by any such incorporated municipality, shall not be approved prior to formal approval by officials of the municipalities involved.

Section 13 EXCEPTIONS

As provided for in the 1992 Illinois Compiled Statutes, 765 ILCS 205/1, the following exceptions to the adherence of this Resolution are noted;

13.01 The division or subdivision of land into parcels or tracts of five (5) acres or more in size which does not involve any new streets or easements of access.

13.02 The division of lots or blocks of less than one (1) acre in any recorded subdivision which does not involve any new streets or easements of access.

13.03 The sale or exchange of parcels of land between owners of adjoining and contiguous land.

13.04 The conveyance of parcels of land or interests therein for use as a right of way for railroads or other public utility facilities and other pipe lines which does not involve any new streets or easements of access.

13.05 The conveyance of land owned by a railroad or other public utility which does not involve any new streets or easements of access.

13.06 The conveyance of land for highway or other public purposes or grants or conveyances relating to the dedication of land for public use or instruments relating to the vacation of land impressed with a public use.

13.07 Conveyances made to correct descriptions in prior conveyances.

13.08 The sale or exchange of parcels or tracts of land following the division into not more than two (2) parts of a particular parcel or tract of land existing on July 17, 1959 and not involving any new streets or easements of access.

13.09 The sale of a single lot of less than five (5) acres from a larger tract when a survey is made by an Illinois Professional Land Surveyor; provided, that this exemption shall not apply to the sale of any subsequent lots from the same larger tract of land, as

determined by the dimensions and configuration of the larger tract on October 1, 1973, and provided also that this exemption does not invalidate any local requirements applicable to the subdivision of land.

Section 14 VARIANCES

When the subdivider can show that a provision of this Resolution, if strictly adhered to, would cause unnecessary hardship and when, in the opinion of the Administrative Officer, because of topographical or other conditions peculiar to the site, a departure may be made without destroying the intent of such provision, the particular requested variance will be presented to the Public Works Committee of the County Board. The Public Works Committee will recommend approval or denial of the variance, for further consideration by the full County Board, meeting in the next scheduled regular session. Any variance thus authorized, shall be included as and made a part of the final plat.

Article II

DEFINITIONS

Section 20 CONSTRUCTION OF TERMS

In construing the intended meaning of terminology used in this Resolution, the following rules shall apply;

20.01 Unless the context clearly indicates otherwise, words and phrases shall have the meanings ascribed to them in Section Twenty One (21). Words not defined in Section Twenty One (21) shall have the meanings ascribed to them as found in the Rock Island County Zoning Resolution. Words not defined in Section Twenty One (21) or the Rock Island County Zoning Resolution shall have meaning as customarily assigned to them.

20.02 Words denoting the masculine gender shall be deemed to include the feminine and neuter genders.

20.03 Words used in the present tense shall include the future tense.

20.04 Words used in the singular number shall include the plural number, and the plural the singular.

20.05 The word "shall" is mandatory; the word "may" is permissive.

Section 21 SELECTED DEFINITIONS

21.01 ADMINISTRATIVE OFFICER

The official appointed by the County Board to administer and enforce the Subdivision Resolution for the Unincorporated area of Rock Island County, Illinois. This official is one and the same as the Administrative Officer as provided in the Rock Island County Zoning Resolution.

21.02 AMENDMENT

A change in the provisions of this Resolution, properly effected in accordance with State Law and current County procedures.

21.03 AREA, GROSS

The entire area within the lot lines of the property proposed for subdivision/development, including any areas to be dedicated or reserved for street and alley rights-of-way and for any other public use.

21.04 BLOCK

An area of land entirely bounded by streets, highways, barriers, or ways (except alleys, pedestrian ways, or exterior boundaries

of a subdivision unless exterior boundary is a street, highway, or way) or bounded by a combination of streets, public parks, cemeteries, railroad right-of-way, waterways, or corporate boundary lines. No block shall be longer than one thousand (1000) feet nor shorter than three hundred (300) feet.

21.05 COLLECTOR STREET

A street used primarily to collect limited amounts of residential traffic and for access to abutting properties, and on which the speed limit is low and traffic volume is minimal.

21.06 CUL-DE-SAC

A street having only one outlet for vehicular traffic and having the other end permanently terminated by a turn-around for vehicles, the term may also be used to refer solely to said turn-around.

21.07 CURB AND GUTTER, INTEGRAL

The rim forming the edge of a street plus the channel for leading off surface water, constructed of poured concrete as a single facility.

21.08 DEVELOP

To erect any structure or to provide any improvements on a tract of land, or to undertake any activity (such as but not limited to grading) in preparation thereof.

21.09 EASEMENT

A grant made by a property owner for use of specified portions of his real property for specific and limited purposes.

21.10 EROSION

The wearing away of the land surface by the action of wind, water or gravity.

21.11 IMPROVEMENTS

Any street, curb, gutter, sidewalk, drainage ditch, catchbasin, newly planted tree, off-street parking area, or other facility necessary for the general use of property owners in a subdivision.

21.12 IMPROVEMENT PLANS

The engineering plans showing types of materials and construction details for the structures and facilities to be installed in, or in conjunction with, a subdivision.

21.13 LETTER OF CREDIT

An engagement by a bank made at the request of a customer that the issuer will honor drafts or other demands for payment upon compliance with the conditions specified in the credit.

21.14 MONUMENT, EXTERNAL BOUNDARY

Two (2) concrete cylinders or rectangular prisms, not less than four (4) inches in diameter or square and forty two (42) inches long, shall be set at the extreme corners of the subdivision.

21.15 MONUMENT, INTERNAL BOUNDARY

Steel pins, not less than one half (1/2) inch in diameter and thirty inches long, with a survey marker cap showing the land surveyor's registration numbers, shall be located at all corners, at each end of all curves, at the point where a curve changes its radius, at all angle points in any line and at all angle points along a meander line.

21.16 PLAT, FINAL

The plan of record for a subdivision, as prepared by an Illinois Professional Surveyor, presented to the Administrative Officer for approval for filing with the County Recorders Office.

21.17 PLAT, PRELIMINARY

The proposed plan of record for a subdivision, as prepared by an Illinois Professional Surveyor, presented to the Administrative Officer, after the pre-filing conference, for review.

21.18 PRE-FILING CONFERENCE

A conference held between the subdivider/developer, Administrative Officer and other authorized representatives of the County, prior to the submission of a preliminary plat.

21.19 ROAD, PRIVATE

An ingress/egress provided as access to building lots. Private roads are not intended for public dedication to Township, County or other incorporated jurisdictions. Private roads do not receive services as provided to other dedicated streets and roadways. Private roads are subject to the standards for streets as listed elsewhere in this Resolution.

21.20 SEDIMENT

Solid material, both mineral and organic, that is in suspension, is being transported, or has been moved from its site of origin by air, water, or gravity as a product of erosion.

21.21 SIDEWALK

A pedestrian way constructed in compliance with the standards of this Resolution.

21.22 SOIL

All unconsolidated mineral and organic material of whatever origin that overlies bedrock which can be readily excavated.

21.23 SUBDIVIDER/DEVELOPER

Any person, firm, partnership, association, corporation, estate or other group or combination acting as a unit, dividing or proposing to divide land in a manner that constitutes a subdivision as defined in this Resolution.

21.24 SUBDIVISION

Any division of land into two (2) or more lots, any of which is less than five (5) acres, or any transfer involving an easement of ingress or egress except as provided in Article I, Section Thirteen (13) of this Resolution.

21.25 SUBDIVISION, MINOR

A division of land of less than five (5) total acres, into two (2) but not more than five (5) lots. A minor subdivision may or may not involve new streets, other rights-of-way, easements, improvements, or other provisions for public areas and facilities.

21.26 SUBDIVISION, MAJOR

A division of land of more than five (5) total acres, into not less than two (2) but typically more than five (5) lots. A major subdivision shall involve new streets, other rights-of-way, easements, improvements, or other provisions for public areas and facilities.

21.27 TOPOGRAPHY

The relief features or surface configuration of an area of land.

21.28 UTILITY

A business or service which is engaged in regularly supplying the public with some commodity or service which is of consequence and need and which has a duty to serve without discrimination all within its service area. A utility can be publicly or privately owned and includes, but not limited to;

21.251 Electricity
21.252 Gas, Oil, or Steam
21.253 Water
21.254 Sanitary Sewerage
21.255 Storm Sewerage
21.256 Telephone or Telegraph
21.257 Cable Television or other Communication Lines
21.258 Transportation lines, such as fixed rail, but only if expressly stated.

21.29 VARIANCE, SUBDIVISION

A relaxation in the strict application of the design and/or improvement standards as provided for in Article I, Section 14 of this Resolution.

Article III

PLATS/PLANS

Section 30 PRE-FILING CONFERENCE

Prior to the presentation of the subdivision preliminary plat, a meeting will be held with the Administrative Officer, Health Department Officials, County Highway Department Officials, the appropriate Township Road Commissioner, Rock Island County Soil and Water Conservation District Officials, and in cases where the subdivision lies within one and one half (1-1/2) miles of an incorporated jurisdictions(s), Officials of the incorporated jurisdiction(s). The purpose of this meeting will be to determine whether the proposed subdivision meets minimum standards required for health, roads, safety, wetlands, soil and zoning issues. The subdivider/developer will present a concept sketch of the proposed subdivision during the pre-filing conference.

30.01 LOCATION

To the extent that is possible, the pre-filing conference should be held at the location of the proposed subdivision. However, the pre-filing conference could be scheduled in the office of the Administrative Officer, or other appropriate locations.

30.02 CONCEPT APPROVAL

Officials, present at the pre-filing conference, will have ten (10) business days to file with the Administrative Officer, a written summary stating any objections to or suggested changes regarding the proposed subdivision. Copies of all written summaries will be sent by the Administrative Officer to the subdivider/developer prior to submission of the Preliminary Plat.

Section 31 PRELIMINARY PLATS

Except as provided below, every person, corporation, or other entity who proposes to subdivide land located in the Unincorporated area of the County shall file six (6) copies of the preliminary plat, together with supporting data, with the Administrative Officer. Such person, corporation, or other entity shall also provide one (1) copy of the preliminary plat, together with supporting data, with the Soil and Water Conservation District. It is the subdividers/developers responsibility to notify the appropriate public utilities. Proof of such notification shall be submitted with the preliminary plat.

31.01 STAGED DEVELOPMENT

Whenever a subdivision is to be developed in different stages, the preliminary plat shall reflect the entire subdivision.

31.02 MINOR SUBDIVISIONS

A minor subdivision **may not** require a preliminary plat. The decision of the Administrative Officer will be final.

31.03 INFORMATION REQUIRED

Every preliminary plat shall be prepared by an Illinois Professional Land Surveyor. Every preliminary plat shall be drawn at a scale that results in a maximum sheet size of thirty six (36) by twenty four (24) inches. The preferred scale is one hundred (100) feet to the inch. A smaller scale, if used, must be clearly noted on the drawing. Said preliminary plat along with all supporting data, shall provide all the following information;

31.031 Names and addresses of the owner, subdivider (if not owner) and Illinois Professional Land Surveyor.

31.032 Name of the proposed subdivision and names of all adjoining subdivisions.

31.033 The Zoning District of the tract to be subdivided, with proposed building setbacks.

31.034 North arrow, graphic scale and date of drawing.

31.035 Dimensions of the tract, and the gross area.

31.036 Topography of the tract as indicated by two (2) foot contour data for land having slopes of zero (0) to four (4) percent, five (5) foot contour data for land having slopes between four (4) to twelve (12) percent and ten (10) foot contour data for land having slopes of twelve (12) percent or greater.

31.037 Locations of existing structures, bodies of water, natural drainage ways, roads, rail lines, bridges, cemeteries and any other such existing features.

31.038 Locations and right-of-way widths of all existing and proposed streets, alleys or sidewalks.

31.039 Locations, widths and purposes of all existing and proposed easements.

31.140 Any and all proposed deed restrictions and covenants.

31.141 Location and size of any existing or proposed sanitary and/or storm sewers, water mains, and any appurtenances thereto.

31.142 Locations, types and approximate sizes of any other existing and proposed utilities.

31.143 Locations, dimensions and areas of all land to be reserved or dedicated for schools, parks/playgrounds or other public purposes.

31.144 Locations, dimensions, and areas of all proposed or existing lots within the subdivision, numbered sequentially.

31.145 The location by township, range, section and parcel(s) number(s).

31.146 A flood statement regarding location of the property in respect to Special Flood Hazard Areas as identified by the Federal Emergency Management Agency.

31.147 A list, with justifications, of any requested variances.

31.04 APPROVALS

The Administrative Officer shall within fifteen (15) business days, review the preliminary plat and approve, recommend corrections or deny approval of said plat. If correction or denial is recommended, the Administrative Officer will forward one (1) drawing along with a letter stating reasons for suggested corrections or denial to the subdivider. The sub-divider will have opportunity to furnish one (1) corrected drawing of the preliminary plat to the Administrative Officer.

31.05 APPEALS

Should the subdivider feel that the Administrative Officer has acted contrary to the standards and intent of this Resolution, he may file an appeal to be heard, with the Public Works Committee of the County Board. Such an appeal will consist of a letter written to the Chairman of the Public Works Committee, requesting agenda time at the next scheduled meeting of the Public Works Committee. Such letter will also state the reasoning used for the appeal. Appeals heard, and decisions made by the Public Works Committee will be final.

Section 32 IMPROVEMENT PLANS

After approval of the preliminary plat by the Administrative Officer, but prior to submission of the final plat, the subdivider shall furnish four (4) copies of the plans and specifications for all improvements to be installed within or in conjunction with the proposed subdivision. The plans will be sealed by the Illinois Registered Civil or Professional Engineer responsible for their preparation. The Administrative Officer shall have no more than fifteen (15) business days to approve or recommend correction of

the improvement plans. In cases where the subdivision lies within one and one half (1-1/2) miles of an incorporated jurisdiction(s), the plans will be approved by Officials of the incorporated jurisdiction(s). All plans such approved, will be forwarded to the Administrative Officer for incorporation into the sudivision file.

32.01 INFORMATION REQUIRED

Improvement plans shall consist of black or blue line prints not larger than thirty six (36) by twenty four (24) inches. These plans and related specifications shall provide all applicable information as follows;

32.011 Topography of the tract, both before and after development at the same scale as required in the preliminary plat.

32.012 Existing and proposed elevations along the centerlines of all streets.

32.013 Radii of all curves and lengths of tangents on all streets.

32.014 Locations, lengths, widths and typical cross-section of street pavements including curbs/gutters and catch basins.

32.015 Locations, lengths, widths and typical cross-sections of sidewalks and driveway aprons.

32.016 Locations and sizes of all water, gas, electric, and other utilities.

32.017 Detailed measures to be taken to prevent and control soil erosion and sedimentation.

32.018 Other such information that the Administrative Officer may reasonably require to perform his duties under this section.

32.02 APPEALS

Appeals of decisions of the Administrative Officer shall be such as shown under Section 31.05 of this Resolution.

32.03 REQUIRED PERMITS

Upon approval of the improvement plans, the Administrative Officer shall notify the subdivider/developer to make application for necessary permits to begin the development. Such permits **may** include the following;

32.031 BUILDING PERMIT

Issued by the County Zoning & Building Department.

32.032 SEPTIC/WELL PERMITS

All plans for septic systems and wells are reviewed, permitted and approved by the County Health Department.

32.033 ROAD ACCESS PERMITS

Issued by the Illinois Department of Transportation, County Highway Department or Township Road Commissioner.

32.034 FLOODWAY PERMITS

Issued by the IDOT, Division of Water Resources.

32.036 NATIONAL POLLUTANT DISCHARGE ELIMINATION SYSTEM (NPDES)

Issued by the Illinois Environmental Protection Agency.

32.03 REQUIRED INSPECTIONS/DOCUMENTATION

The Administrative Officer shall inspect planned improvements while they are under construction. Should it seem that the improvements are being built contrary to plan, or in violation of any article or section of this Resolution, a stop work order will be issued. The following inspections and documentation **may be required;**

32.031 MONUMENT PLACEMENT

The Administrative Officer will insure that monuments shown on the Final Plat of the subdivision have been set in accordance with the requirements of Illinois State Statutes.

32.032 SITE LAYOUT

The Administrative Officer will inspect the site of the subdivision being developed to insure that the layout of all streets, alleys, sidewalks and the like meet the approved development plan.

32.033 DAILY SITE LOG

The subdivider/developer will prepare and maintain a daily log that documents required information listed below. Copies of said log will be provided to the

Administrative Officer upon development completion. The following information shall be provided;

32.131 Weather conditions, temperature, wind velocity and precipitation status.

32.132 General site conditions.

32.133 Actual hours the site is worked.

32.134 Actual hours an inspector is on site.

32.135 Specific information regarding any materials testing performed.

32.136 Detailed descriptions of any problems occurred on site.

32.034 STREETS AND ALLEYS

For all new public streets and alleys the subdivider/developer shall document and provide copies of said documentation to the Administrative Officer that such improvements meet standards as required by the Illinois Department of Transportation. All new or proposed public or private streets and alleys shall meet design specifications as shown in Appendix 1, 2, 3, 4 and 5.

32.035 UTILITIES

All utilities provided as new installations within a subdivision shall be placed in the right of way or in easements, and shall be provided underground, unless a variance has been granted.

32.231 REQUIREMENTS

All electric distribution circuits installed by the utility company within the County shall be installed in accordance with the Safety Rules for the Installation and Maintenance of Electric Supply and Communication Lines, U.S. Department of Commerce, National Bureau of Standards and General Order No. 160, Rules for Construction of Electric Power and Communication Lines, Illinois Commerce Commission.

32.036 WATER FACILITIES

All existing or proposed improvements concerning potable water facilities shall be reviewed, permitted and approved by the County Health Department.

32.037 EASEMENTS

Easements for all new subdivisions shall be provided as follows;

32.331 UTILITY

Ten (10) foot wide easements shall be provided for public and private utilities along the front right-of-way lines of the public streets. Easements located elsewhere shall be at least twenty (20) feet wide and if along lot lines, they shall be centered on the lot lines.

32.332 SANITARY SEWERS

All easements for proposed sanitary sewers shall be reviewed and approved by the County Health Department.

32.333 DRAINAGE

Adequate easements for storm water drainage shall be established along any natural drainage channel and in any other locations where necessary to provide satisfactory disposal of storm water from streets, alleys and all other portions of the subdivision. The precise location and minimum widths of said easements shall be determined by the Soil and Water Conservation District, County Highway Department or Township Road Commissioner.

32.038 SOIL EROSION AND SEDIMENTATION CONTROL

The subdivider/developer shall protect the development site from soil erosion and shall protect downstream property from sedimentation deposits during the construction of the subdivision. The subdivider/developer shall also employ storm water management practices to keep post-development peak discharge rates equal to pre-development rates. Practices contained in "Procedures and Standards for Urban Soil Erosion and Sedimentation Control in Illinois" shall be employed in the preparation of an erosion and sedimentation control plan which shall be approved by the Soil and Water Conservation District prior to any earth disturbing activity taking place.

32.04 FORM OF ASSURANCE

The Administrative Officer shall determine the need for any special form of assurance. Generally, if the proposed subdivision requires any new streets, utilities or other improvements, a letter of credit shall be required.

32.041 LETTER OF CREDIT

The Administrative Officer shall estimate the amount of constructing improvements as shown in the approved Development Plans. This estimated amount shall be made available in the manner shown below;

32.141 IRREVOCABLE LETTER OF CREDIT

A commitment from a lending institution guaranteeing to the County the availability of the escrow funds from time to time upon demand. See appendix six (6) for an approved format.

Section 33 FINAL PLAT

The final plat of the subdivision shall be presented to the Administrative Officer only after formal approvals of the preliminary plat and the development plan. The Administrative Officer will have fifteen (15) business days to review the final plat to determine if it is in compliance with all requirements of this Resolution, including those listed below.

33.01 FILING, TIME LIMITS

The subdivider/developer of every subdivision, who desires final plat approval shall file one (1) mylar plat and five (5) black or blue line prints of the final plat and supporting data with the Administrative Officer not later than one (1) year after formal preliminary plat approval has been granted.

33.02 APPEALS

Appeals of decisions of the Administrative Officer shall be such as shown in Section 31.05 of this Resolution.

33.03 INFORMATION REQUIRED

Every final plat shall be prepared by an Illinois Professional Surveyor. One (1) plat shall be prepared on mylar at a scale not greater than one hundred (100) feet to one (1) inch, provided that the resultant drawing shall not be less than eight and one half (8-1/2) by fourteen (14) inches and shall not exceed twenty four (24) by thirty six (36) inches. Any scale change due to

drawing size limitations must be clearly marked on the final plat. The final plat shall include the following information;

33.021 North Arrow and graphic scale used.

33.022 Name of Subdivider and Subdivisions Name

33.023 Accurate metes and bounds or other adequate legal description of the tract tied to a section or quarter (1/4) section corner.

33.024 Accurate boundary lines, with dimensions and bearings or angles which provide a survey of the tract, closing with an error of closure of not more than one (1) foot in fifteen thousand (15,000) feet and provide a copy of the closure calculations.

33.025 Accurate locations of all existing streets intersecting the boundaries of the subdivision.

33.026 Names and/or numbers and right-of-way width of every proposed street.

33.027 Locations, widths and purpose of any existing or proposed easement.

33.028 Lot numbers, lot dimensions and building set back lines for every proposed building lot.

33.029 External and internal boundary monument locations.

33.121 Purpose for which areas, other than building lots are reserved.

33.122 Restrictions of all types which will run with the land and become covenants in the deeds of all lots.

33.123 Signature area for Officials as shown in Appendix Seven (7).

ARTICLE IV

FEES/AMENDMENTS

Section 40 FEES

The County Board shall establish a fee schedule for subdivision activities. This fee schedule may be reviewed from time to time if requested by the Administrative Officer or other interested party. Requests for fee schedule review will be submitted to the Public Works Committee Chairman in writing. The Chairman shall request the Administrative Officer to schedule a Public Hearing as noted in Section 41.02 of this Resolution.

40.01 SCHEDULE OF FEES

The following fees are adopted by the County Board;

40.011 Subdivisions requiring staff review and monument inspections only shall be seventy five ($75.00) dollars.

40.012 Subdivisions less than five (5) acres, requiring staff review, monument and development inspections shall be one hundred fifty ($150.00) dollars.

40.013 Subdivisions more than five (5) acres, requiring staff review, monument and development inspections shall be three hundred ($300.00) dollars.

40.02 SCHEDULE OF PAYMENT

Fifty percent of the fee will be due upon presentation of the Preliminary Plat. The remaining fifty percent will be due upon presentation of the Final Plat. In cases where no Preliminary Plat is required, the entire fee will be due upon presentation of the Final Plat.

Section 41 AMENDMENTS

The Administrative Officer shall review the effectiveness of this Resolution on an annual basis. From time to time as is deemed appropriate, amendments to this Resolution may be presented to the Public Works Committee of the County Board.

41.01 FILING PROCEDURES

The Administrative Officer or any other interested party may request an amendment to this Resolution. Such a request shall be made in writing and addressed to the Chairman, Public Works Committee. The Chairman will review the requested amendment

and advise the Administrative Officer to schedule a public hearing regarding the proposed amendment.

41.02 PUBLIC HEARING PROCEDURES

The Administrative Officer shall follow the criteria listed below in scheduling and formatting the hearing;

41.021 Must be advertised in a publication of general circulation in the County.

41.022 Must not be published more than thirty (30) nor less than fifteen (15) days prior to the hearing.

41.023 Written notice of such hearing, along with the requested amendments, shall be sent to the Clerks of all incorporated municipalities and villages and to all Township Supervisors within the County.

41.024 Testimony taken at the hearing will be recorded and made available in formal minutes to any interested party.

41.025 The Public Works Committee at the conclusion of testimony, will move to approve, deny or defer decision regarding the proposal. Any such deferral will be acted upon within sixty (60) days of the date of deferral.

41.026 Recommendations to approve or deny will be presented at the next regularly scheduled County Board meeting, for consideration by the full County Board.

...INDEX OF APPENDIXES...

		Page Number
Appendix 1	TABLE OF STREET/ALLEY DESIGN SPECIFICATIONS....	21
Appendix 2	PRIVATE ROAD - CONSTRUCTION DETAIL.....	22
Appendix 3	TOWNSHIP ROAD - CONSTRUCTION DETAIL.....	23
Appendix 4	URBAN STREET - CONSTRUCTION DETAIL.....	24
Appendix 5	ALLEY - CONSTRUCTION DETAIL.....	25
Appendix 6	LETTER OF CREDIT FORMAT.....	26
Appendix 7	SIGNATURE AREA - FINAL PLAT.....	28

APPENDIX 1

TABLE OF STREET/ALLEY DESIGN SPECIFICATIONS

Type	Allowed Parking	Right of Way	Finished Surface	Grade
Private Road *	None	60 Feet	24 Feet	Max 10% Min 0.5%
Township Road **	None	60 Feet	36 Feet	Max 10% Min 0.5%
Urban Streets ***	None	50 Feet	32 Feet	Max 10% Min 0.5%
Alley ****	None	20 Feet	18 Feet	Max 10% Min 0.5%

* Detailed in Appendix 2

** Detailed in Appendix 3

*** Detailed in Appendix 4

**** Detailed in Appendix 5

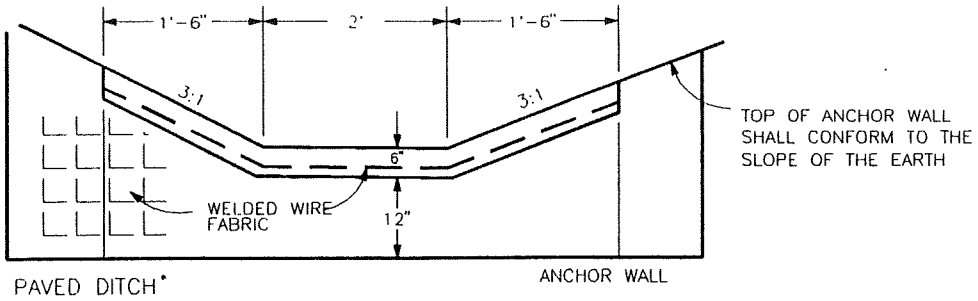

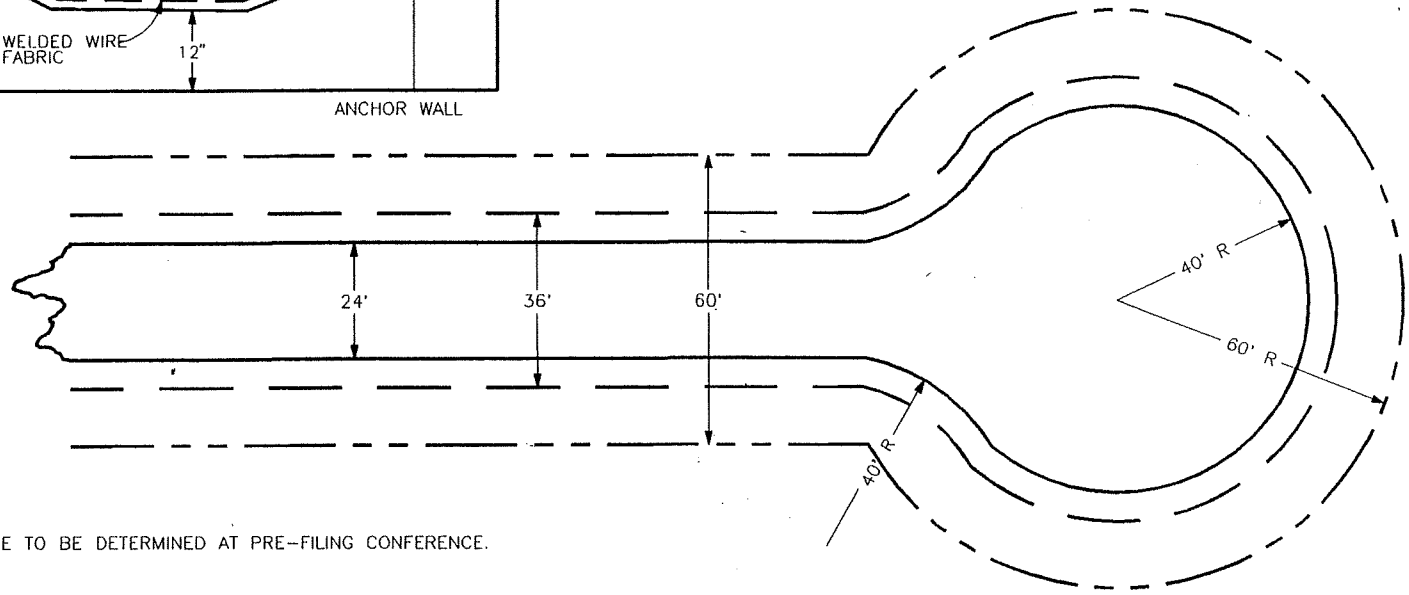

*FINISHED SURFACE TO BE DETERMINED AT PRE-FILING CONFERENCE.

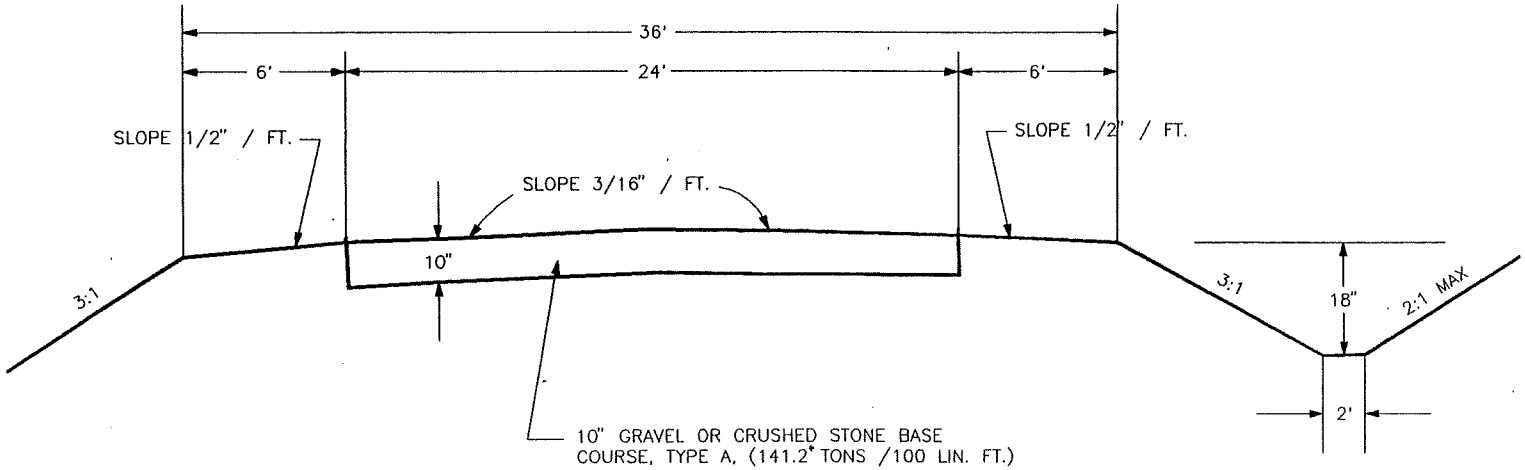

*CRUSHED STONE AT 2.05 TON / CUBIC YARDS

APPENDIX 2

PRIVATE ROAD CONSTRUCTION DETAIL

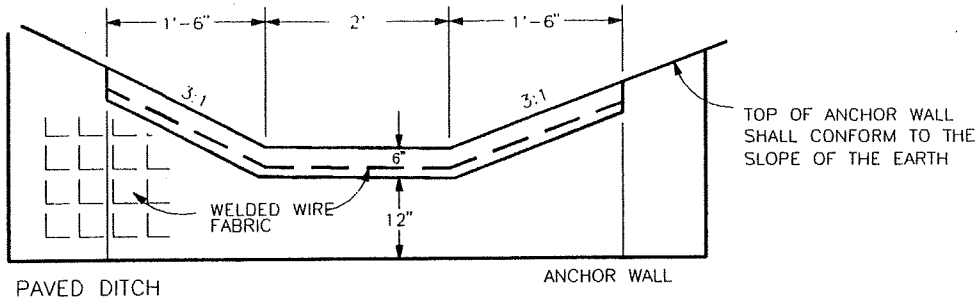

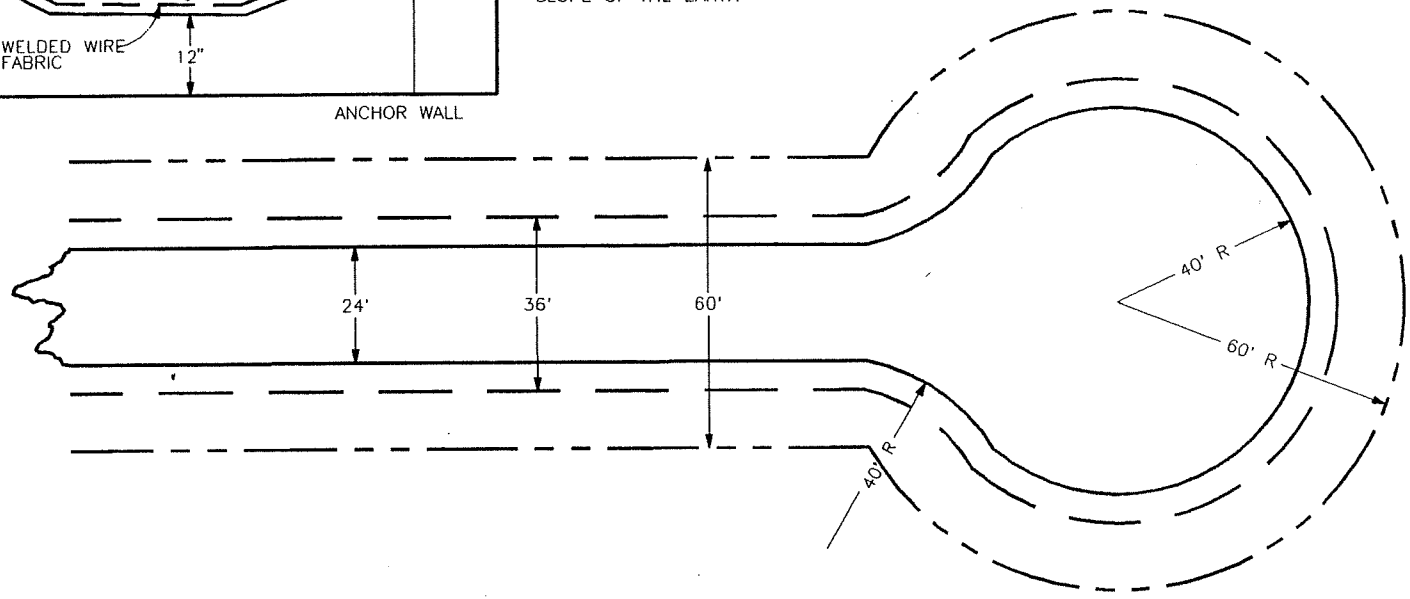

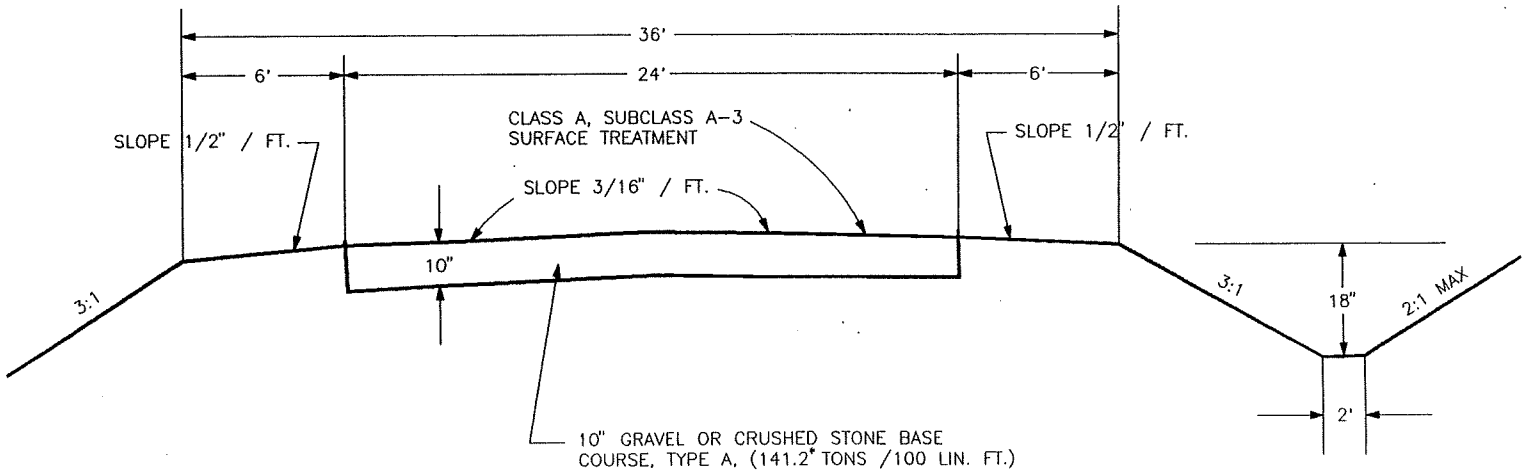

*CRUSHED STONE AT 2.05 TON / CUBIC YARDS

APPENDIX 3

TOWNSHIP ROAD CONSTRUCTION DETAIL

COMBINATION CONCRETE CURB AND GUTTER

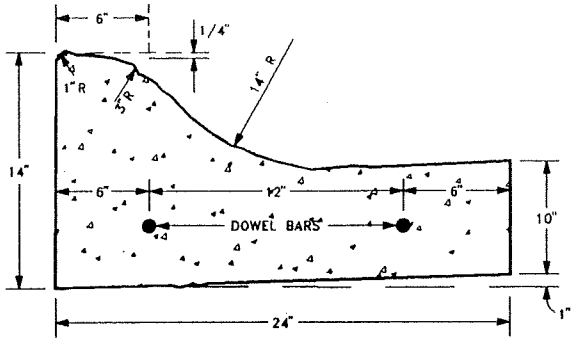

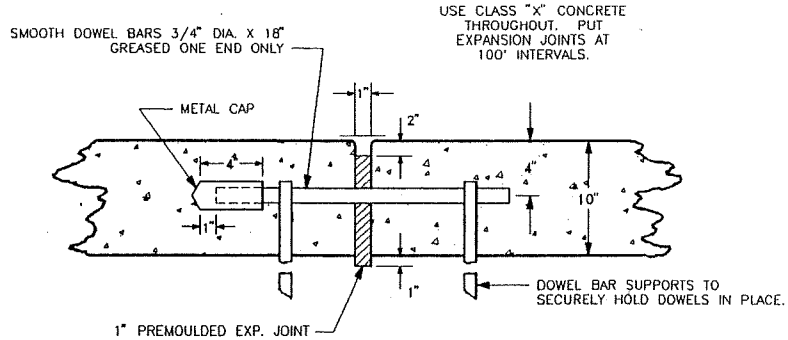

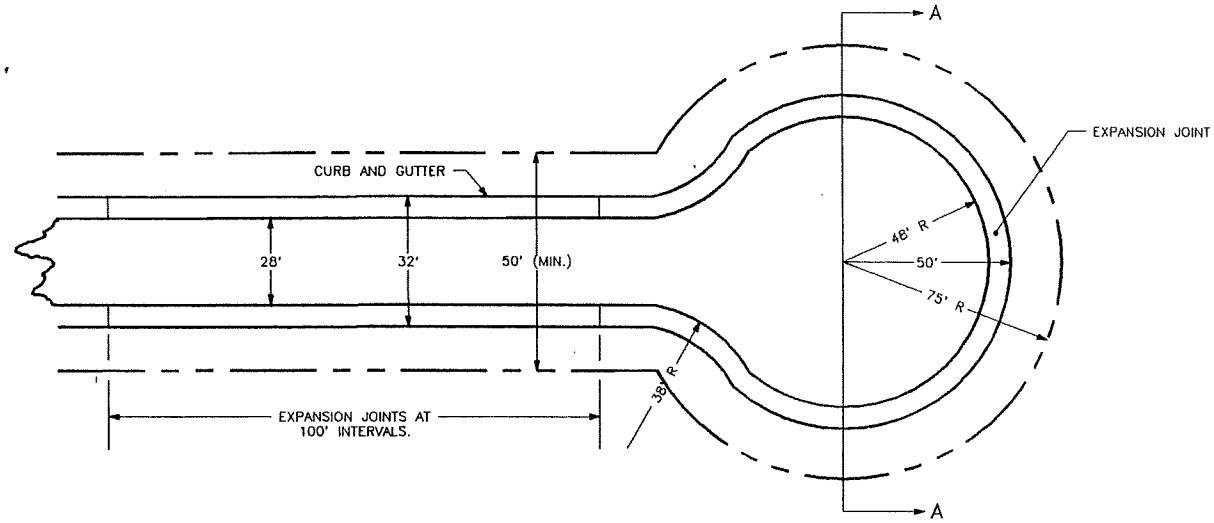

TYPICAL CROSS SECTION

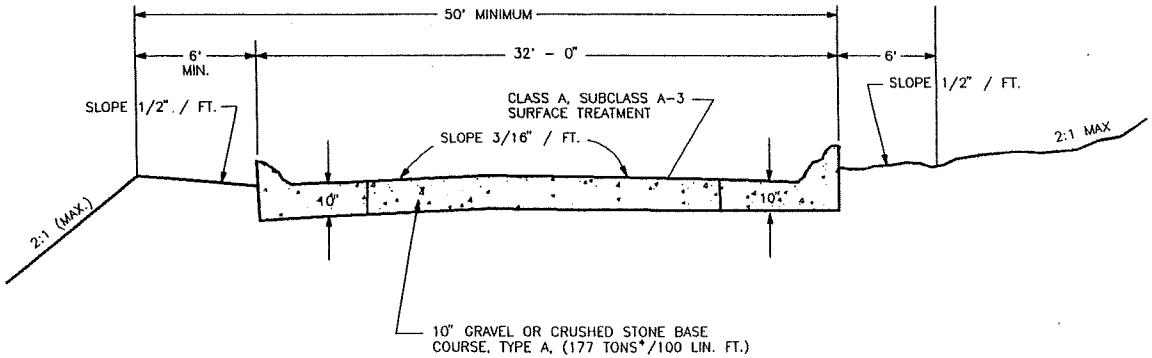

*CRUSHED STONE AT 2.05 TON / CUBIC YARDS

APPENDIX 4

URBAN STREET CONSTRUCTION DETAIL

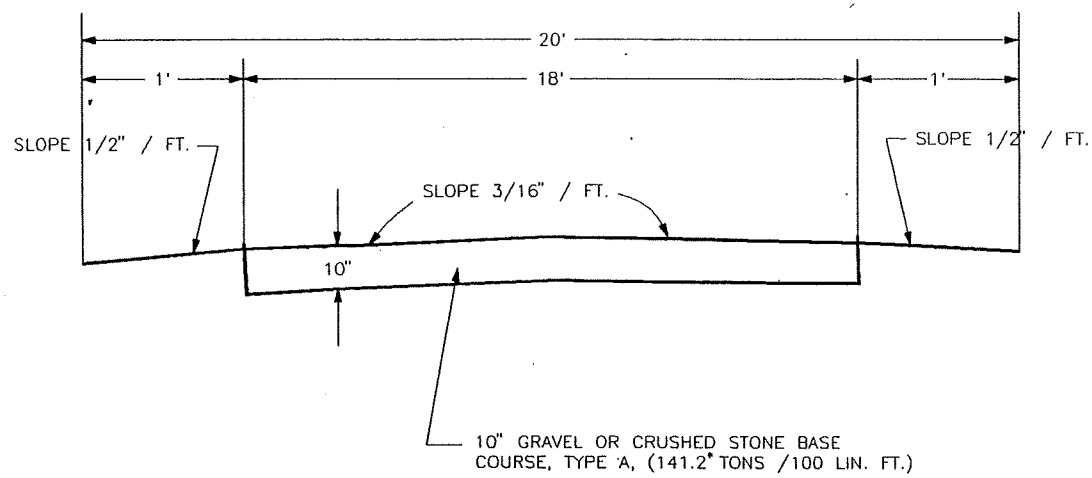

*CRUSHED STONE AT 2.05 TON / CUBIC YARDS

APPENDIX 5

ALLEY
CONSTRUCTION DETAIL

APPENDIX 6

LETTER OF CREDIT FORMAT

Bank_____ Irrevocable Credit #_____
Address_____ Date_____
City_____State_____Zip Code_____

All drafts must be marked: "Drawn under Credit #_____dated_____"

Gentlemen:

We hereby open an Irrevocable Letter of Credit in the amount of _____($_____) in your favor for the account of (Developer)_____, the developer of (subdivision)_____, a proposed subdivision for final plat in the County of Rock Island, Illinois, or within its territorial jurisdiction, for the benefit of the County of Rock Island, Illinois. Said money hereunder shall be available by your drafts at sight drawn on us drawn in the name of the County of Rock Island, Illinois.

Drafts must be accompanied by a signed statement by the Administrative Officer of the County of Rock Island, Illinois, that the request is for the installation or construction of improvements required pursuant to the plans, specifications, and cost estimates dated _____, as approved by the Administrative Officer. Further, all requests for disbursements under this Letter of Credit made prior to _____, shall be submitted by the developer and accompanied by a certified estimate of units and value of work completed with contractor's sworn statement and waiver of mechanics' liens, all approved by the Developer's Professional Engineer and the Administrative Officer of the County of Rock Island, Illinois. It is understood as to all disbursements that the Administrative Officer shall approve partial drawings only as long as there remains a sufficient balance to the Credit to cover his then current estimate of costs for the required improvements which at that time remain to be completed, but in no case shall his approval exceed ninety percent (90%) of the value of work completed.

In the event that all of the work for the improvements is not completed to the satisfaction of the County on or before _____, the funds remaining under this Letter of Credit shall be available to the County of Rock Island, Illinois upon presentation of their draft at sight drawn on us in the name of the County of Rock Island, Illinois. Further, such draft shall be accompanied by a signed statement by the Administrative Officer of the County of Rock Island, Illinois as follows: "I_____ Administrative Officer of the County of rock Island, Illinois, do hereby certify that work on required improvements in the subdivision named _____has not been completed to the satisfaction of the County of Rock Island, Illinois on or before _____.

This credit shall expire on _____; provided, however, the undersigned shall notify the Administrative Officer by certified mail, return receipt requested, at least ninety (90) days prior to the expiration date that this Letter of Credit is about to expire and provided, however, in no event shall this Credit expire except upon prior written notice, it being expressly agreed by the undersigned that the

above expiration date shall be extended as shall be required to comply with this notice provision.

The undersigned further agrees that this Credit shall remain in full force and effect and pertain to any and all amendments or modifications which may be make from time to time to the specifications, and agreements for the subdivision, without notice from the County of the amendments or modifications.

All acts, requirements and other preconditions for the issuance of this Irrevocable Letter of Credit have been completed.

We hereby engage with the drawers, endorsers, and bona fide holders of drafts, drawn under and in compliance with the terms of this Credit, that same shall be honored upon presentation to the drawer. This Credit must accompany any draft which exhausts the Credit and must be surrendered concurrently with the presentation of such draft.

We hereby undertake and engage that all demands made in conformity with this Credit will be honored upon presentation. If, within ten (1) days of the date any demand make in conformity with this Credit is presented, we fail to honor same, we agree to pay all attorneys' fees, court costs, and other expenses incurred by the County of Rock Island, Illinois in enforcing the terms of this Credit.

Dated_____

Bank_____

By_____ Attest:_____

APPENDIX 7

SIGNATURE AREA - FINAL PLAT

The following signature blocks must be part of the Subdivision Final Plat:

_____	_____
Property Owner(s)	Illinois Professional Surveyor
_____	_____
Subdivider*	Incorporated Municipality**

Approved this_____day of _____A.D., 19_____.

_____
Rock Island County Clerk

Approved this_____day of _____A.D., 19_____.

_____
Rock Island County Administrative Officer

---

*If different from owner(s).

**If required for approval.

A RESOLUTION AMENDING THE ROCK ISLAND COUNTY SUBDIVISION RESOLUTION

***WHEREAS**, pursuant to the regulations of the Subdivision Resolution of Rock Island County, and*

***WHEREAS,** it is the desire of the County Board of Rock Island County, Illinois to amend such Subdivision Resolution.*

***WHEREAS,** a public hearing was held as set forth in Article IV, Section 41.02 of the Rock Island County Subdivision Resolution.*

Be it therefore resolved by the County Board of Rock Island County, Illinois, in open meeting this 21st day of April, 1998 as follows:

40.03 Geographic Information System (GIS) requirements.

All new subdivisions shall be required to submit the line drawings for the final plat and as developed plats in digital format (Digital Format to be submitted as .dxf or .dwg file extensions.) All plats not submitted in digital format will be submitted with a conversion fee based on the following table:

1-10 lots - $25.00 per lot
over 10 lots - $300.00

40.031 All new subdivisions of 2 lots or more shall be required to have the monuments as shown on the final plat, located by means of Global Positioning System (GPS). Rock Island County will provide GPS identification of said monuments upon notification that monuments have been set. The fee for such service shall be $20.00 per monument.

1) That this resolution shall become effective immediately upon its adoption.

Done in open meeting this 21st day of April, 1998.

Signed _____
Timothy L. Oliver, Director
Zoning & Building

THE COUNTY BOARD OF ROCK ISLAND COUNTY

By _____
PAUL E. MULCAHEY, CHAIRMAN

ATTEST: _____
RICHARD "DICK" LIEBOVITZ
COUNTY CLERK

Rz-98-106

98-417